Timber Pile Design and Construction Manual

Timber Piling Council
American Wood Preservers Institute

PREFACE

This *Timber Pile Design and Construction Manual* has been developed by the American Wood Preservers Institute (AWPI) as its official recommendation for Timber Piling Design and Construction.

The data in this publication has been prepared in accordance with recognized engineering principles and is based on available technical data. The information in this manual should not be used or relied upon for a specific application without competent professional examination and verification of its accuracy, suitability, and applicability by a licensed professional engineer.

By publication of this manual, AWPI intends no representation or warranty, expressed or implied, that the information in the manual is suitable for any specific application or is free from infringement of any patent or copyright. Any user of this information assumes all risk and liability arising from such use.

The manual was developed to assist design engineers with the design of timber piling.

Manual Author: **James G. Collin, PH.D., P.E.** **The Collin Group, Ltd.**

The manual was reviewed by the AWPI Timber Pile Manual Technical Committee.

AWPI Timber Pile Manual Technical Committee

Grady Brafford	Dean Matthews
Bob Gourlay	Tom O'Malley
Randy Kelly	Morgan Wright

Special thanks is given to the following for their advice on the manual.
Ryan R. Berg, P.E. Ryan R. Berg & Associates
Martin Rollins, P.E., H. M. Rollins Company, Inc.

Future changes to this manual will be posted on the following web site.
www.preservedwood.com www.wwpinstitute.com

© Copyright American Wood Preservers Institute 2002
All rights reserved. Printed in the USA.

BE CONSTRUCTIVE™
wood

Deep Foundations Institute Wood Promotion Network Pile Driving Contractors Association

Timber Pile Design and Construction Manual
Table of Contents

1.0 Introduction
- 1.1 Scope of Manual
- 1.2 Background
- 1.3 Seismic Design Considerations
- 1.4 Organization of Manual

2.0 Foundation Design Procedure
- 2.1 Design of Foundations
- 2.2 Foundation Design Process

3.0 Timber Pile Properties
- 3.1 Introduction
- 3.2 Allowable Stress Design
- 3.3 Tabulation of Allowable Stress and Pile Capacity
  - 3.3.1 Pipe Capacity
- 3.4 Pile Size Specifications
- 3.5 Working Strength based on Small Clear Wood Specimens
  - 3.5.1 Axial Compressive Stress
  - 3.5.2 Extreme Fiber Bending Stress
  - 3.5.3 Compressive Stress Perpendicular to the Grain
  - 3.5.4 Shear Stress Perpendicular to the Grain
  - 3.5.5 Modulus of Elasticity
- 3.6 Allowable Stress
  - 3.6.1 Load Duration
  - 3.6.2 Temperature
  - 3.6.3 Pressure Treatment
  - 3.6.4 Size
  - 3.6.5 Load Sharing
  - 3.6.6 Allowable Stress
- 3.7 Preservative Process
  - 3.7.1 Creosote
  - 3.7.2 Chromated Copper Arsenate (CCA)
    - 3.7.2.1 CCA Industrial Uses
  - 3.7.3 Ammoniacal Copper Zinc Arsenate (ACZA)
  - 3.7.4 CCA and ACZA
  - 3.7.5 Preservative Retention
- 3.8 Durability Considerations

4.0 Static Analysis Design Procedures
- 4.1 Introduction
- 4.2 Soil/Pile Interaction
  - 4.2.1 Load Transfer
- 4.3 Factors of Safety

4.4 Engineering News Record Formula

5.0 Design of Single Piles
5.1 Introduction
5.2 Meyerhof Method
5.3 Nordlund Method
5.4 Alpha (α) Method
5.5 Effective Stress Method for Piles in Cohesionless and Cohesive Soils
5.6 Nottingham and Schmertmann Method
5.7 Uplift Capacity of Single Piles

6.0 Design of Pile Groups
6.1 Introduction
6.2 Axial Capacity of Pile Groups in Cohesionless Soils
6.3 Axial Capacity of Pile Groups in Cohesive Soils
6.4 Settlement of Pile Groups in Cohesionless Soils
6.5 Settlement of Pile Groups in Cohesive Soils

7.0 Marine Application Design Considerations
7.1 Introduction
7.2 Broms' Method

8.0 Pile Installation
8.1 Introduction
8.2 Pile Driving Equipment
8.2.1 Leads
8.2.2 Pile Hammers
8.2.3 Helmet
8.3 Hammer Size Selection
8.4 Pile Accessories
8.5 Pile Cutoffs

9.0 Pile Load Testing
9.1 Introduction
9.2 Axial Compression Static Load Test
9.2.1 Interpretation of Load Test

10.0 Quality Assurance During Pile Driving
10.1 Introduction
10.2 Timber Pile Quality Requirements
10.3 Material Certifications
10.4 Pile Driving Equipment and Pile Installation

11.0 Specifications
11.1 Introduction

11.2 Material Specification

12.0 Geotechnical Considerations
12.1 Introduction
12.2 Planning Site Investigation
12.2.1 Desk Study – Available Existing Data
12.2.2 Field Reconnaissance
12.3 Guidelines for Minimum Subsurface Exploration Program
12.4 Methods of Subsurface Exploration
12.4.1 Hollow-Stem Augers
12.4.2 Rotary Wash Borings
12.4.3 Test (Exploration) Pit Excavation
12.5 Soil and Rock Sampling
12.5.1 Soil Samplers
12.5.2 Rock Core Samplers
12.6 Groundwater Conditions
12.7 Subsurface Profile Development
12.8 In-Situ Testing
12.8.1 Cone Penetration Test (CPT)
12.8.2 Vane Shear Test
12.9 Laboratory Soil Testing
12.9.1 Index Tests
12.9.2 Shear Strength Tests
12.9.3 Consolidation Tests
12.10 Laboratory Testing for Pile Driveability Determination

References

Appendix A Design Examples

CHAPTER 1.0
INTRODUCTION

1.1 SCOPE OF MANUAL

All objects and structures transfer their load either directly or indirectly to the earth. The capacity of the earth to support such loads depends on the strength and stability of the supporting soil or rock materials. Not all foundation materials possess the required characteristics to carry imposed loads or to resist natural or man made forces without resulting in damage to the structures they support. Consequently, the engineer is faced with the task of designing foundations to distribute high-intensity loads in a manner that can be supported by existing natural subgrade materials, and/or modifying those natural materials.

There are three basic approaches to achieving proper support of structures. These are: a) distribution of structural loads to foundations, such that the intensity of the loads transferred will not cause shear failure or objectionable settlement of the structure; b) modification of the foundation soil (i.e., soil improvement); or c) a combination of "a" and "b" above.

There are two general types of foundations for distributing applied structural loads to the ground: shallow foundations, and deep foundations. Shallow foundations principally distribute structural loads over large areas of near-surface soil to lower the intensity of the applied loads to levels tolerable for the foundation soils. The analysis and design of shallow foundations is not discussed in this manual. Deep foundations distribute loads to deeper, more competent soils or to rock, by means of skin-friction, end bearing, or a combination of both. This manual is devoted to the discussion of the structural and geotechnical aspects of timber pile foundation design.

This design manual follows the design methodology presented in the Federal Highway Administration's *Design and Construction of Driven Pile Foundations* (FHWA-HI-97-013). The information from this FHWA document has been condensed to focus solely on timber piles and has been supplemented to provide additional guidance with respect to the selection of timber pile structural properties required for design.

1.2 BACKGROUND

Timber piles have successfully supported structures for more than 6,000 years. Over the years, the methods that man has employed to extend the life of timber piling have evolved to the point that timber piles will last for over 100 years. Ancient civilizations used various animal, vegetable, and mineral oils to preserve timber. In Roman times, timbers were smeared with cedar oils and pitch, then charred to extend their service life. Roman roads built on treated piles were still in good condition 1,900 years later. A building built in Venice, Italy in 900 A.D. was rebuilt around 1900 on the same 1000 year old piles.

The modern age of wood preserving began in England in 1832. Pressure injection of coal-tar creosote into wood began in 1838. Following the successful use of pressure treated railroad ties, U.S. railroads started treating foundation piles in the early 1880's.

Since then, pressure treatment has been recognized as a process that protects wood by extending its life indefinitely. This is why building codes require wood for certain uses to be "treated" and why codes explicitly define "treated" as pressure treated.

In recent years, extensive load tests have been performed on pressure treated timber foundation piles. Design loads as high as 75 tons have been specified, and ultimate loads as high as 235 tons have been carried by timber piles. There are wooden piles loaded to 60 tons each under bridges spanning the Thames River in London and 100 ton timber piles in bridges spanning the River Seine in Paris.

Today wood piles are a mainstay of foundation designers. Wood piles are being routinely used in all kinds of structures, including manufacturing plants, processing facilities, commercial buildings, and highway bridges. For example, thousands of pressure treated wood piles were used for the foundation of new facilities at JFK Airport in New York, and at Dulles International Airport in Northern Virginia. The city of New Orleans, Louisiana is built on timber piles. Residential buildings, commercial buildings and the Superdome as well as paved highways in New Orleans are supported on timber piles. New Orleans, however, is not alone in its use of timber piles to support highways. The highest ever recorded design load for timber piles in U.S. highway construction is a 1000 foot long viaduct, supported by timber piles, which have a 75 ton design load on Interstate 80 near Winnemucca, Nevada.

1.3 SEISMIC DESIGN CONSIDERATIONS

The scope of this manual does not included seismic design considerations. There is on-going research on Performance-Based Seismic Design funded by the Federal Emergency Management Agency (FEMA). A separate bulletin is planned on Seismic Design Considerations for timber piling in the future.

1.4 ORGANIZATION OF MANUAL

This manual is intended to be a stand-alone document and is geared towards providing the practicing structural and geotechnical engineer with a thorough understanding of the design and construction of timber pile foundations. The organization of the manual is presented below.

Chapter 2 provides an overview of the design and construction process for a timber pile foundation.

Chapter 3 covers the selection of the strength properties of timber piles and considerations with respect to pile durability.

Chapter 4 gives an overview of the static design process for timber piles.

Chapter 5 presents five design methods to determine the static capacity of single piles in both cohesive and cohesionless soils.

Chapter 6 covers the design of timber pile groups.

Chapter 7 discusses design considerations for Marine applications.

Chapter 8 discusses pile installation considerations.

Chapter 9 covers static and pile load testing.

Chapter 10 deals with quality assurance and quality control during timber pile installation.

Chapter 11 provides a model specification for timber pile projects.

Chapter 12 reviews the geotechnical considerations that are important in defining the site conditions (i.e., subsurface exploration program) and provide the design engineer with the necessary information to perform the foundation design with respect to the subsurface soils.

This manual does not cover seismic/dynamic analysis. For information on this subject, the readers are referred to the Federal Highway Administration's *Design and Construction of Driven Pile Foundations* (FHWA-HI-97-013).

CHAPTER 2.0
FOUNDATION DESIGN PROCEDURE

2.1 DESIGN OF FOUNDATIONS

Foundations are often classified as shallow or deep foundations, depending on the depth of the load-transfer member below the superstructure. Thus a deep, as compared with a shallow, foundation becomes a somewhat relative term. A shallow foundation, as defined in this manual, is one in which the depth to the bottom of the footing is less than or equal to four times the smallest dimension of the footing.

The foundation engineer must have a thorough understanding of the foundation loads, subsurface conditions, including soil/rock properties and behavior, foundation performance criteria, and current practices in foundation design and construction in the area where the work is to be done to arrive at the optimum foundation solution. When designing foundations, it is essential to systematically consider the various foundation types and to select the optimum alternative based on the superstructure requirements and subsurface conditions.

2.2 FOUNDATION DESIGN PROCESS

The timber pile foundation design-construction process is outlined in the flow chart in Figure 2-1. This flow chart will be discussed block by block, using the numbers in the blocks as a reference, and will serve to guide the designer through all of the tasks that should be considered (after FHWA, 1998).

Block 1: Assemble Information Regarding Proposed Structure

The first step in the process is to determine the general structure requirements. The following questions should be asked and answered during this phase of the design process: Is the project a new commercial office building, a residential building, a new bridge, a replacement bridge, a retaining wall, a noise wall, a sign, etc.? Will the project be constructed in phases or all at once? What is the general structure layout? Is the structure subjected to any special design events such as seismic, scour, debris, etc.? If there are special design events, the design requirements for the event should be reviewed at this stage so that these considerations can be factored into the site investigation. What are the approximate foundation loads? Are there deformation or deflection limitations beyond the usual requirements?

Block 2: Obtain General Site Geology

A great deal may be learned about the foundation requirements with even a very general understanding of the site geology. For small structures, this may involve only a very superficial investigation such as a visit to the site. The foundation design for very large structures may require extensive geologic studies.

Block 3: Collect Foundation Experience from the Area

Frequently there is information available on foundations that have been constructed in the area. This information can be of assistance in avoiding problems. Both subsurface exploration information and foundation construction experience should be sought prior to selecting the foundation type.

Block 4: Develop and Execute Subsurface Exploration Program

Based on the information obtained in Blocks 1-3, it is possible to make decisions regarding the necessary information that must be obtained at the site. The program must meet the needs of the design problem that is to be solved at a cost consistent with the size of the structure. The subsurface exploration program, as well as the appropriate soil laboratory-testing program, must be selected. The results of the exploration and testing programs are used to prepare a subsurface profile and identify critical cross-sections.

Block 5: Evaluate Information and Select Foundation System

The information in Blocks 1-4 must be evaluated and a foundation system selected. The first question to be decided is whether a shallow or a deep foundation is required. This question will be answered based primarily on the strength and compressibility of the site soils, the proposed loading conditions and the project performance criteria. If settlement is not a problem for the structure, then a shallow foundation will typically be the most economical solution. Ground improvement techniques in conjunction with shallow foundations should be evaluated when a shallow foundation does not meet the project requirements. If the structure performance criteria can not be met by a shallow foundation, a deep foundation should be used.

Refined foundation loading information and performance criteria should be established at this time. In Block 1, this issue was considered. At this stage of the design effort, a better definition of the design foundation loads and performance criteria are typically available. They should be included in the design process. The geotechnical engineer should obtain a completely defined and unambiguous set of foundation loads and performance requirements in order to proceed through the foundation design.

Block 6: Deep Foundation

At this stage the designer must decide between a deep foundation system and either a shallow foundation of soil improvement or a shallow foundation. The decision on foundation type should be based on performance and economics.

Block 7: Driven Piles

Once a deep foundation has been selected, the designer must decide to use either driven piles or other deep foundation systems (i.e., drilled shafts, auger cast piles etc.). The question that should be answered in deciding between driven piles and other deep foundation systems is which system will perform as desired for the least cost. In addition to performance and cost, constructability should be considered.

Block 8: Select Driven Pile Type

The pile type should be selected consistent with the applied load per pile. The general magnitude of the applied load is known from the information obtained in blocks 1-5. A large number of combinations of pile capacities and pile types can satisfy the design requirements. The selection of pile type should consider both the structural capacity of a pile and the realistic geotechnical capacity of the pile type for the soil conditions at the site, the cost of alternative piles, and the capability of available construction contractors to drive the selected pile. Timber piles are economical piles that should be considered when anticipated pile loads are between 50 and 150 kips and when anticipated pile lengths are between 20 – 125 feet. Table 2-1 presents various types of driven piles their advantages and disadvantages, and what conditions are most favorable for their use.

Block 9: Calculate Pile Length and Capacity

For timber piles, perform a static analysis to estimate the length necessary to provide the required capacity (i.e., compression, uplift and lateral load). It may be necessary to increase the number of piles to satisfy the structural requirements.

Block 10: Calculate Driveability

The static design completed in block 9 addresses the structural capacity of the pile. It is also important to assess the driveability of the selected pile to assure that the required capacity and penetration depth may be achieved at a reasonable driving resistance. The driveability analysis cannot be completed until the pile hammer has been selected (this will depend on the contractor selected for the project). Pile driveability will be covered in some detail in Chapter 9.

Block 11: Satisfactory Design

At this point the computations for the design are complete.

Block 12: Prepare Plans and Specifications

The design is, in fact, not complete until the plans and specifications are prepared. It is important that all of the quality control procedures are clearly defined to avoid claims after construction is underway.

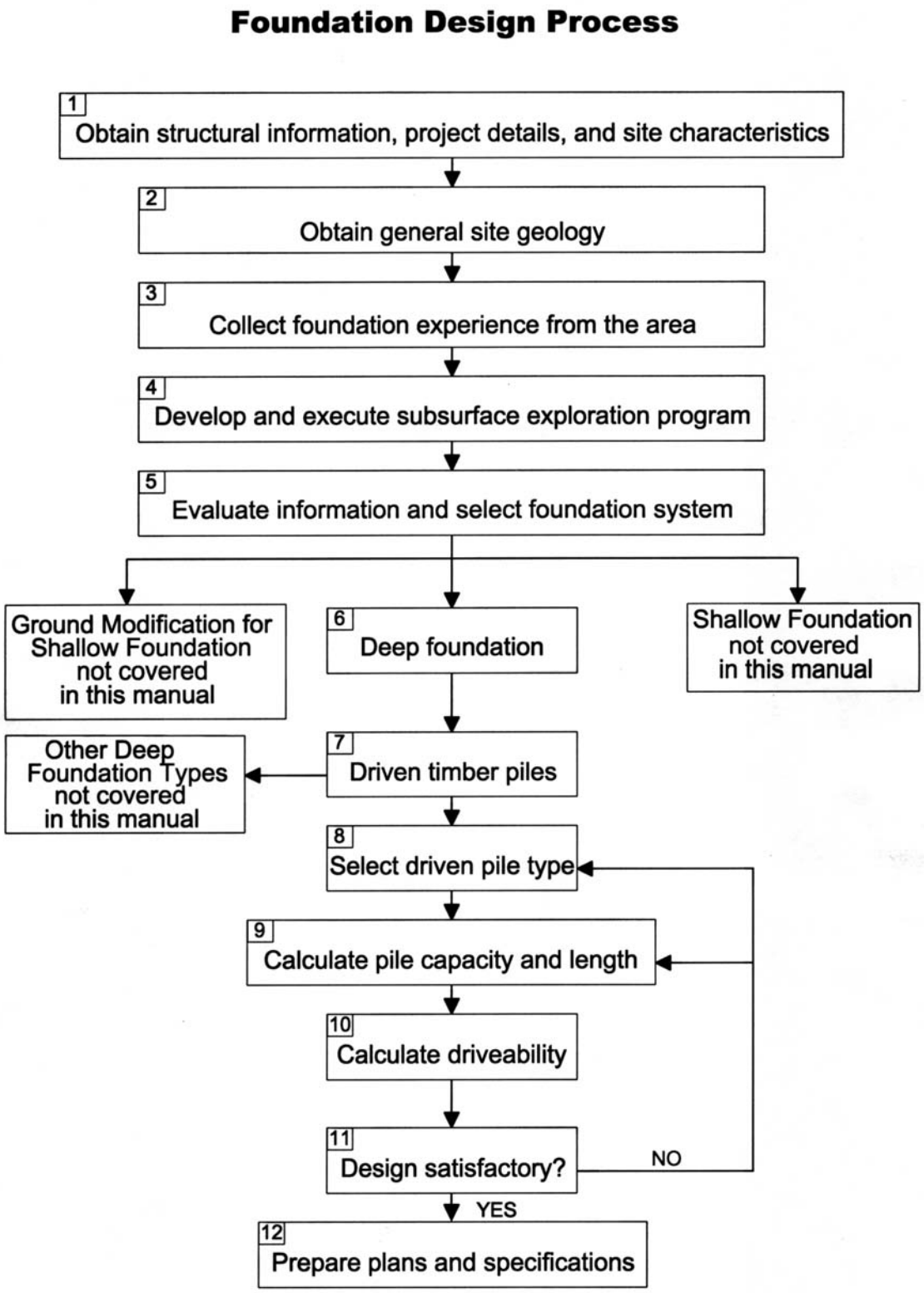

Figure 2-1: Flow chart timber pile design process

Table 2-1

Pile Type	Timber	Steel H-Piles	Steel Pipe Piles	Pre-Cast/ Prestressed Concrete	Cast-in-Place Concrete Mandrel Driven Shell	Cast-in-Place Concrete Shells Driven Without Mandrel
Typical Length (ft)	20-75 (Douglas Fir to 125)	20-100	30-120	30-45 (precast) 45-120 (pre-stressed)	10-120	15-80
Typical Axial Design Loads (kips)	35-150	100-400	200-500	100-250	100-300	100-300
Advantages	• Low cost • Renewable resource • Easy to handle • Easy to drive • Pile length variations easily accounted for • Tapered section provides higher resistance in granular soils than uniform piles • Used as friction or end bearing pile	• Easy to splice • High capacity • Small displacement	• Open ended good against obstructions • High load capacity	• High load capacity • Corrosion resistance obtainable	• Initial economy • Tapered sections provide higher resistance in granular soils than uniform piles • Can be inspected after driving	• Can be redriven • Shell not easily damaged
Disadvantages	• Difficult to splice • Low axial capacity	• Vulnerable to corrosion • Not recommended for friction pile	• Displacement for closed end pipe • Open ended not recommended as friction pile	• Vulnerable to handling damage • High breakage rate • High initial cost	• Difficult to splice after concreting • Thin shell vulnerable during driving • Considerable displacement	• Difficult to splice after concreting

CHAPTER 3.0
TIMBER PILE PROPERTIES

3.1 INTRODUCTION

The design of timber pile foundations requires a firm understanding of the mechanical properties of the timber pile. There are generally two species of timber used for the manufacture of timber piles : Douglas Fir and Southern Yellow Pine. Other species such as Caribbean Pine, Lodgepole Pine, Red Oak, and Red Pine are also used on occasion.

ASTM D 25 *Standard Specification for Round Timber Piles* establishes physical properties and manufacturing requirements and ASTM D 2899 *Standard Practice for Establishing Stresses for Round Timber Piles* provides the procedures for developing timber piling stresses from small clear specimens. The strength properties are derived from clear wood strength of small specimens tested in accordance with ASTM D 2555 *Standard Test Method for Establishing Clear Wood Strength Values.*

Recent research (Bodig and Arnette, 2000) on full-scale strength testing has been conducted on approximately 100 Southern Yellow Pine piles and 100 Douglas Fir piles. This research has demonstrated that currently used allowable design stresses are conservative. A new ASTM standard for developing timber piling stresses based on full scale tests is under development. A condensed report will soon be available.

3.2 ALLOWABLE STRESS DESIGN

The selection of material properties for piles must consider both static and dynamic stresses. A pile must be able to withstand the dynamic stresses induced in the pile during the driving process, as well as the static stresses that the pile is subjected to in service.

The allowable stresses for timber piles published in this manual are based on the American Forest & Paper Association (AFPA) publication, *Manual for Engineered Wood Construction – Allowable Stress Design, Supplement Timber Poles and Piles* and procedures outlined in the ASTM standards referenced above. Allowable stresses and pile capacity are tabulated in section 3.3 and maximum butt and tip dimensions versus pile length are presented in section 3.4. Section 3.5 reviews the procedures to determine the allowable stresses for timber piles from small clear wood specimens. Section 3.6 provides an analytical method for determining allowable stresses using reduction factors to account for load duration, temperature, pressure treatment, etc.

3.3 TABULATION OF ALLOWABLE STRESS AND PILE CAPACITY

Table 3-1 provides recognized allowable stresses for timber piles, as published by the American Forest and Paper Association. The values provided in table 3-1 are applicable for pile groups, with wet exposures, at normal temperature range (i.e., <100°F), and with a ″normal″ load duration factor of 1. The tabulated values are given for piles treated with a preservative using a steam conditioning or Boultonizing processes. For piles that are air dried or kiln-dried prior to treating stresses may be increased by 11% to 18% (see section 3.6).

Table 3-1
Allowable Stress Values for Treated Round Timber Piles Graded in Accordance with ASTM D25

Species	Axial Compression (F_c) (psi)	Bending (F_b) (psi)	Shear Perpendicular to the Grain (F_v) (psi)	Compression Perpendicular to the Grain ($F_{c\perp}$) (psi)	Modulus of Elasticity (E) (psi)
Southern Pine[1]	1200	2400	110	250	1,500,000
Douglas Fir[2]	1250	2450	115	230	1,500,000
Lodgepole Pine	1150	1700	80	270	1,000,000
Red Oak[3]	1100	2450	135	350	1,250,000
Red Pine[4]	900	1900	85	155	1,280,000

1. Southern Pine design values apply to Loblolly, Longleaf, Shortleaf, and Slash Pines.
2. Pacific Coast Douglas Fir design values apply to this species as defined in ASTM D 1760
3. Red Oak design values apply to Northern and Southern Red Oak
4. Red Pine design values apply to Red Pine grown in the United States

3.3.1 Pile Capacity

Table 3-2 provides compression strength parallel-to-the-grain as a function of the specified pile tip circumference (ASTM D25). The allowable values are only applicable when the pile tip circumference is specified in accordance with ASTM D25. The values presented in Table 3-2 do not consider buckling capacity of timber piles.

The tip of the pile represents the smallest circumference and lowest strength section of a pile. Additional capacity may be computed at other locations in the pile by considering the increased cross-sectional area away from the tip using linear taper and specified butt circumference.

Table 3-2 for allowable design capacities is based on the following conditions :

- Timber piles meet ASTM D25
- In-service temperature range < 100°F
- Wet service conditions
- Timber piles have had preservative treatment
- Compression members fully laterally supported (fully embedded in soil)
- Piles in a cluster (pile groups)
- Critical location for compression parallel to the grain is the tip of the pile.

When these conditions do not occur the pile capacity should be adjusted using the adjustment factors presented in Table 3-10.

3.4 PILE SIZE SPECIFICATIONS

The natural taper of timber piles is a factor in the design formula. The natural taper of Southern pine is approximately 0.1 in/ft throughout the length. Douglas fir has a smaller taper within 20 feet of the butt. The result is often a smaller tip for a given butt size in Douglas fir and other western species.

Table 3-3 provides specified butt circumferences with corresponding minimum tips sizes for Southern pine. Table 3-4 provide specified tip circumferences with corresponding minimum butt circumferences for Southern Pine. The corresponding tables for Douglas fir and other western species are in Tables 3-5 and 3-6.

Table 3-2
Allowable Pile Capacity in Compression (kips)

Timber Species	Allowable Pile Capacity in Compression (kips)					
	Pile Tip Diameter (inches)					
	7	8	9	10	11	12
Southern Pine	46	60	76	94	114	136
Douglas Fir	48	63	80	98	119	141

Table 3-3 Southern Pine Foundation Piling – Specified Butt Circumferences with Corresponding Minimum Tip Circumferences [A,B,C,D,E] (from ASTM D25 - Table X1.3)

[Approximate Diameters in Brackets]

Required Minimum Circumference, in. 3 ft from Butts	22 [7]	25 [8]	28 [9]	31 [10]	35 [11]	38 [12]	41 [13]	44 [14]	47 [15]	50 [16]	57 [18]
Length (ft)	Minimum Tip Circumferences, in.										
20	16 [5.1]	16 [5.1]	18 [5.7]	21 [6.7]	25 [8.0]	**28 [8.9]**	**31 [9.9]**	**34 [10.8]**	**37 [11.8]**	40 [12.7]	47 [15.0]
25	16 [5.1]	16 [5.1]	17 [5.4]	20 [6.4]	24 [7.6]	**27 [8.6]**	**30 [9.5]**	**33 [10.5]**	**36 [11.4]**	39 [12.4]	46 [14.6]
30	16 [5.1]	16 [5.1]	16 [5.1]	19 [6.0]	23 [7.3]	**26 [8.3]**	**29 [9.2]**	**32 [10.2]**	**35 [11.1]**	38 [12.1]	45 [14.3]
35				18 [5.7]	22 [7.0]	**25 [8.0]**	**28 [8.9]**	**31 [9.9]**	**34 [10.8]**	37 [11.8]	44 [14.0]
40				17 [5.4]	21 [6.7]	**24 [7.6]**	**27 [8.6]**	**30 [9.5]**	**33 [10.5]**	36 [11.4]	43 [13.7]
45					20 [6.4]	**23 [7.3]**	**26 [8.3]**	**29 [9.2]**	**32 [10.2]**	35 [11.1]	42 [13.4]
50					19 [6.0]	**22 [7.0]**	**25 [8.0]**	**28 [8.9]**	**31 [9.9]**	34 [10.8]	41 [13.0]
55						**21 [6.7]**	**24 [7.6]**	**27 [8.6]**	**30 [9.5]**	33 [10.5]	40 [12.7]
60						**20 [6.4]**	**23 [7.3]**	**26 [8.3]**	**29 [9.2]**	32 [10.2]	39 [12.4]
65						19 [6.0]	**22 [7.0]**	**25 [8.0]**	**28 [8.9]**	31 [9.9]	38 [12.1]
70						18 [5.7]	**21 [6.7]**	**24 [7.6]**	27 [8.6]	30 [9.5]	37 [11.8]
75							**20 [6.4]**	23 [7.3]	26 [8.3]	29 [9.2]	36 [11.4]
80							19 [6.0]	22 [7.0]	25 [8.0]	28 [8.9]	35 [11.1]
85							18 [5.7]	21 [6.7]	24 [7.6]	27 [8.6]	34 [10.8]

Commonly available sizes are shown within the bold outline:

[A] Where the taper applied to the butt circumferences calculate to a circumference at the tip of less than 16 in., the individual values have been increased to 16 in. to ensure a minimum of 5-in. tip for purposes of driving.
[B] To convert to metric dimensions, 1 in. = 25.4 mm.
[C] Class A piles are all those listed with a specified required minimum circumference of 44 in. at 3 ft from butt.
[D] Class B piles are those listed with a specified required minimum circumference at 3 ft from butt of 35 in. and lengths of 20 to 25 ft minimum circumference at 3 ft from butt of 38 in. and lengths of 20 to 50 ft, and minimum circumference at 3 ft from butt of 41 in. and lengths of 55 to 80 ft.
[E] Southern Yellow Pine piles are generally available in lengths shorter than 70 ft or girth of less than 50 in. at 3 ft from butt. The purchaser should inquire as to availability of sizes below the lines.

Table 3-4 Southern Pine Foundation Piling – Specified Tip Circumferences with Corresponding Minimum Butt Circumferences [A,B] (from ASTM D25 – Table X1.5)

[Approximate Diameters in Brackets]

Required Minimum Tip Circumference, In.	16 [5]	19 [6]	22 [7]	25 [8]	28 [9]	31 [10]	35 [11]	38 [12]
Length (ft)	Minimum Circumferences 3 ft from Butt, in.							
20	19 [6.0]	**22 [7.0]**	**25 [8.0]**	**28 [8.9]**	**31 [9.9]**	**34 [10.8]**	38 [12.1]	41 [13.0]
25	20 [6.4]	**23 [7.3]**	**26 [8.3]**	**29 [9.2]**	**32 [10.2]**	**35 [11.1]**	39 [12.4]	42 [13.4]
30	21 [6.7]	**24 [7.6]**	**27 [8.6]**	**30 [9.5]**	**33 [10.5]**	**36 [11.4]**	40 [12.7]	43 [13.7]
35	22 [7.0]	**25 [8.0]**	**28 [8.9]**	**31 [9.9]**	**34 [10.8]**	**37 [11.8]**	41 [13.0]	44 [14.0]
40		**26 [8.3]**	**29 [9.2]**	**32 [10.2]**	**35 [11.1]**	**38 [12.1]**	42 [13.4]	45 [14.3]
45		**27 [8.6]**	**30 [9.5]**	**33 [10.5]**	**36 [11.4]**	39 [12.4]	43 [13.7]	46 [14.6]
50			**31 [9.9]**	**34 [10.8]**	**37 [11.8]**	40 [12.7]	44 [14.0]	47 [15.0]
55			**32 [10.2]**	**35 [11.1]**	**38 [12.1]**	41 [13.0]	45 [14.3]	48 [15.3]
60			**33 [10.5]**	**36 [11.4]**	39 [12.4]	42 [13.4]	46 [14.6]	49 [15.6]
65			**34 [10.8]**	**37 [11.8]**	40 [12.7]	43 [13.7]	47 [15.0]	50 [15.9]
70			**35 [11.1]**	**38 [12.1]**	41 [13.6]	44 [14.0]	48 [15.3]	51 [16.2]
75			**36 [11.4]**	39 [12.4]	42 [13.4]	45 [14.3]	49 [15.6]	52 [16.6]
80			37 [11.8]	40 [12.7]	43 [13.7]	46 [14.6]	50 [15.9]	53 [16.9]
85			38 [12.1]	41 [13.0]	44 [14.0]	47 [15.0]	51 [16.2]	54 [17.2]
90			39 [12.4]	42 [13.4]	45 [14.3]	48 [15.3]	52 [16.6]	55 [17.5]

Commonly available sizes are shown within the bold outline: Dimensions for ASTM Table X1.1 minimum 8 inch tip size, sometimes known as natural taper piles, are shown in column for 8 inch diameter tips. These are for piles up to 45 ft. in length.

[A] To convert to metric dimensions, 1 in. = 25.4 mm

[B] Piles purchased as “8-in. and natural taper” have a required minimum tip circumference of 25 in. and are available in lengths of 20 to 45 ft.

[C] Southern Yellow Pine piles are generally available in lengths shorter than 70 ft. or girth of less than 50 in. at 3 ft. from butt. The purchaser should inquire as to availability of sizes below the lines.

TABLE 3-5 Douglas Fir Foundation Piling – Specified Butt Circumferences with Corresponding Minimum Tip Circumferences [A,B] (from ASTM D 25 – Table X1.2)

[Approximate Diameters in Brackets]

Required Minimum Circumference, in. 3 ft from Butts	22 [7]	25 [8]	28 [9]	31 [10]	35 [11]	38 [12]	41 [13]	44 [14]	47 [15]	50 [16]	57 [18]
Length (ft)	Minimum Tip Circumferences, in.										
20	16.0 [5.1]	16.0 [5.1]	16.0 [5.1]	18.0 [5.7]	**22.0 [7.0]**	**25.0 [8.0]**	**28.0 [8.9]**				
25	16.0 [5.1]	16.0 [5.1]	16.0 [5.1]	17.0 [5.4]	**20.5 [6.5]**	**23.5 [7.5]**	**26.5 [8.4]**	**29.5 [9.4]**			
30	16.0 [5.1]	16.0 [5.1]	16.0 [5.1]	16.0 [5.1]	**19.0 [6.0]**	**22.0 [7.0]**	**25.0 [8.0]**	**28.0 [8.9]**			
35				16.0 [5.1]	**18.0 [5.7]**	**21.0 [6.7]**	**24.0 [7.6]**	**27.0 [8.6]**	**30.0 [9.5]**		
40				16.0 [5.1]	**17.0 [5.4]**	**20.0 [6.4]**	**23.0 [7.3]**	**26.0 [8.3]**	**29.0 [9.2]**		
45					**16.5 [5.3]**	**18.5 [5.9]**	**21.0 [6.7]**	**24.0 [7.6]**	**27.0 [8.6]**	30.0 [9.5]	
50					16.0 [5.1]	**17.0 [5.4]**	**19.0 [6.0]**	**22.0 [7.0]**	**25.0 [8.0]**	28.0 [8.9]	
55						**16.5 [5.3]**	**17.5 [5.6]**	**20.3 [6.5]**	**23.3 [7.4]**	26.3 [8.4]	31.3 [10.0]
60						**16.0 [5.1]**	**16.0 [5.1]**	**18.6 [5.9]**	**21.6 [6.9]**	24.6 [7.8]	31.6 [10.0]
65						**16.0 [5.1]**	**16.0 [5.1]**	**17.3 [5.5]**	**18.9 [6.0]**	21.9 [7.0]	28.9 [9.2]
70						16.0 [5.1]	**16.0 [5.1]**	**16.0 [5.1]**	**16.2 [5.2]**	19.2 [6.1]	26.2 [8.3]
75							**16.0 [5.1]**	**16.0 [5.1]**	**16.1 [5.1]**	17.6 [5.6]	24.0 [7.6]
80							16.0 [5.1]	**16.0 [5.1]**	**16.0 [5.1]**	16.0 [5.1]	21.8 [6.9]
85							16.0 [5.1]	**16.0 [5.1]**	**16.0 [5.1]**	16.0 [5.1]	20.6 [6.6]
90							16.0 [5.1]	**16.0 [5.1]**	**16.0 [5.1]**	16.0 [5.1]	19.5 [6.2]
95							16.0 [5.1]	**16.0 [5.1]**	**16.0 [5.1]**	16.0 [5.1]	18.8 [6.0]
100							16.0 [5.1]	**16.0 [5.1]**	**16.0 [5.1]**	16.0 [5.1]	18.0 [5.7]
105										16.0 [5.1]	17.0 [5.4]
110										16.0 [5.1]	16.0 [5.1]
115											16.0 [5.1]
120											16.0 [5.1]

Commonly available sizes are shown within the bold outline:

[A] Where the taper applied to the butt circumferences calculate to a circumference at the tip of less than 16 in., the individual values have been increased to 16 in. to ensure a minimum of 5-in. tip for purposes of driving.
[B] To convert to metric dimensions, 1 in. = 25.4 mm.

TABLE 3-6 Douglas Fir Foundation Piling – Specified Tip Circumferences with Corresponding Minimum Butt Circumferences [A,B] (from ASTM D 25 - Table X1.4)

[Approximate Diameters in Brackets]

Required Minimum Tip Circumference, In.	16 [5]	19 [6]	22 [7]	25 [8]	28 [9]	31 [10]	35 [11]	38 [12]
Length (ft)	Circumferences 3 ft from Butt, in.							
20	21.0 [6.7]	24.0 [7.6]	**27.0 [8.6]**	**30 [9.5]**	**33.0 [10.5]**	**36.0 [11.5]**	40.0 [12.7]	43.0 [13.7]
25	22.8 [7.1]	25.3 [8.1]	**28.3 [9.0]**	**31.3 [10.0]**	**34.3 [10.9]**	**37.3 [11.9]**	41.3 [13.1]	44.3 [14.1]
30	23.5 [7.5]	26.5 [8.4]	**29.5 [9.4]**	**32.5 [10.3]**	**35.5 [11.3]**	**38.5 [12.3]**	42.5 [13.5]	45.5 [14.5]
35	24.8 [7.9]	27.8 [8.8]	**30.8 [9.8]**	**33.8 [10.8]**	**36.8 [11.7]**	**39.8 [12.7]**	43.8 [13.9]	46.8 [14.9]
40	26.0 [8.3]	29.0 [9.2]	**32.0 [10.2]**	**35.0 [11.1]**	**38.0 [12.1]**	**41.0 [13.0]**	45.0 [14.3]	48.0 [15.3]
45	27.3 [8.7]	30.3 [9.6]	**33.3 [10.6]**	**36.3 [11.6]**	**39.3 [12.5]**	42.3 [13.5]	46.3 [14.7]	49.3 [15.7]
50	28.5 [9.1]	31.5 [10.0]	34.5 [11.0]	**37.5 [11.9]**	**40.5 [12.9]**	43.5 [13.8]	47.5 [15.1]	50.5 [16.1]
55	29.8 [9.5]	32.8 [10.4]	35.8 [11.4]	**38.8 [12.4]**	**41.8 [13.3]**	44.8 [14.3]	48.8 [15.5]	51.8 [16.5]
60	31.0 [9.9]	34.0 [10.8]	37.0 [11.8]	**40.0 [12.7]**	**43.0 [13.7]**	46.0 [14.6]	50.0 [15.9]	53.0 [16.9]
65	32.3 [10.3]	35.3 [11.2]	38.3 [12.2]	**41.3 [13.1]**	**44.3 [14.1]**	47.3 [15.1]	51.3 [16.3]	54.3 [17.3]
70	33.5 [10.7]	36.5 [11.6]	39.5 [12.6]	**42.5 [13.5]**	**45.5 [14.5]**	48.5 [15.4]	52.5 [16.7]	55.5 [17.7]
75	34.8 [11.1]	37.8 [12.0]	40.8 [13.0]	**43.8 [13.9]**	**46.8 [14.9]**	49.8 [15.9]	53.8 [17.1]	56.8 [18.1]
80	36.0 [11.5]	39.0 [12.4]	42.0 [13.4]	**45.0 [14.3]**	**48.0 [15.3]**	51.0 [16.2]	55.0 [17.5]	58.0 [18.5]
85	37.3 [11.9]	40.3 [12.8]	43.3 [13.8]	**46.3 [14.7]**	**49.3 [15.7]**	52.3 [16.6]	56.3 [17.9]	59.3 [18.9]
90	38.5 [12.3]	41.5 [13.2]	44.5 [14.2]	**47.5 [15.1]**	**50.5 [16.1]**	53.5 [17.0]	57.5 [18.3]	60.5 [19.3]
95	39.8 [12.7]	42.8 [13.6]	45.8 [14.6]	**48.8 [15.5]**	**51.8 [16.5]**	54.8 [17.4]	58.8 [18.7]	61.8 [19.7]
100	41.0 [13.0]	44.0 [14.0]	47.0 [15.0]	**50.0 [15.9]**	**53.0 [16.9]**	56.0 [17.8]	60.0 [19.1]	
105	42.3 [13.5]	45.3 [14.4]	48.3 [15.4]	**51.3 [16.3]**	54.3 [17.3]	57.3 [18.2]		
110	43.5 [13.8]	46.5 [14.8]	49.5 [15.8]	**52.5 [16.7]**	55.5 [17.7]	58.5 [18.6]		
115	44.8 [14.3]	47.8 [15.2]	50.8 [16.2]	**53.8 [17.1]**	56.8 [18.1]			
120	46.0 [14.6]	49.0 [15.6]	52.0 [16.6]	**55.0 [17.5]**	58.0 [18.5]			

Commonly available sizes are shown within the bold outline: Dimensions for ASTM Table X1.1 minimum 8 inch tip size, sometimes known as natural taper piles, are shown in column for 8 inch diameter tips. These are for piles up to 45 ft. in length.

[A] To convert to metric dimensions, 1 in. = 25.4 mm

[B] Piles purchased as "8-in. and natural taper" have a required minimum tip circumference of 25 in. and are available in lengths of 20 to 45 ft.

Table 3-7 Sizes of Class A, B and 8 Inch Minimum Tip Piles

Length (ft)	8 inch min. tip pile*	Dia. 3 ft from butt x tip dia.	
		Class A	Class B
To 40	See 8 inch tip sizes column in tables 3-4 & 3-6	14” @ 3’ x 9”	12” @ 3’ x 8”
40 to 54		14” @ 3’ x 9”	12” @ 3’ x 7”
55 to 74		14” @ 3’ x 8”	13” @ 3’ x 7”
75 to 90		14” @ 3’ x 7”	13” @ 3’ x 6”
> 90		14” @ 3’ x 6”	13” @ 3’ x 5”

* Also known as NYC Building Code Pile

TABLE 3-8 Sizes of Timber Pile per Canadian Standards Association (Can3-056)

Diameter at Extreme Butt or Large End inches [centimeters]	14 [36]	13 [33]	12 [30]	11 [27]	10 [24]
Length feet	Diameter at Tip inches [centimeters]				
Up to 20	10 [25]	10 [25]	9 [23]	8 [20]	7 [18]
20 to 34	10 [25]	9 [23]	8 [20]	7 [18]	6 [15]
35 to 44	9 [23]	8 [20]	7 [18]	6 [15]	-
45 to 59	8 [20]	7 [18]	7 [18]	-	-
60 to 69	8 [20]	7 [18]	6 [15]	-	-
70 to 89	7 [18]	6 [15]	-	-	-
90 to 105	6 [15]	5 [13]	-	-	-

TABLE 3-9 Residential Bulkhead and Dock Piling

Diameter at Butt (inches)	Southern Pine Length (feet)	Douglas Fir Length (feet)
8	12-30	12-30
10	16-35	16-35
12	20-40	20-40

3.5 WORKING STRENGTH BASED ON SMALL CLEAR WOOD SPECIMENS

The method presented is this section is based on ASTM D 2899. Small clear wood samples of timber piles may be used to determine the allowable design strengths. Section 3.5 provides guidance on determining the working strength of timber piles using the small clear wood specimens. Section 3.6 provides guidance on how to determine the allowable strength of species based on the working strength values determined in Section 3.3.

3.5.1 Axial Compressive Stress

The working stress in static compression parallel to the grain for green untreated timber piles ($C\Uparrow$) is determined per ASTM D 2899 using the following equation:

$$C\Uparrow = (S - 1.645SD)/\ 1.88 \qquad (3\text{-}1)$$

where : *S* = Average small clear crushing strength determined from ASTM D 2555
SD = Standard deviation of small clear crushing strength.

For dynamic stresses (short term stresses due to pile installation), the working stress parallel to the grain is three times the static working stress parallel to the grain for green untreated timber piles ($C\Uparrow$).

3.5.2 Extreme Fiber Bending Stress

The extreme fiber bending stress for timber piles (*f*) is determined per ASTM D 2899 using the following equation :

$$f = (S - 1.645SD)/\ 2.04 \qquad (3\text{-}2)$$

where : *S* = Average small clear bending strength determined per ASTM D 2555
SD = Standard deviation of small clear bending strength.

For dynamic stresses (short term stresses due to pile installation) the working stress for small clear wood bending strength is three times the static working stress for small clear wood bending strength for green untreated timber piles (*f*).

3.5.3 Compressive Stress Perpendicular to the Grain

The working stress in compression, perpendicular to the grain, for green untreated timber piles ($C\perp$) is determined per ASTM D 2899 using the following equation:

$$C\perp = S/\ 1.5 \qquad (3\text{-}3)$$

where : *S* = Average proportional limit stress of small clear specimens determined per ASTM D 2555

3.5.4 Shear Stress Perpendicular to the Grain

The working stress in horizontal shear perpendicular to the grain for green untreated timber piles (σ) is determined per ASTM D 2899 using the following equation:

$$\sigma = (S - 1.645SD)/\ 5.47 \qquad (3\text{-}4)$$

where : *S* = Average small clear shear strength specimens determined per ASTM D 2555
SD = Standard deviation of small clear shear strength.

3.5.5 Modulus of Elasticity

The average small clear modulus of elasticity values determined per ASTM D 2555 shall be taken as the values for timber piles.

3.6 ALLOWABLE STRESS

The allowable stress is determined from the working stress, as determined using the equations in sections 3.5, multiplied by factors that account for wood fiber density, duration of load, service temperature, pressure treatment, pile size, effect of single pile versus group pile, critical section and bearing area.

3.6.1 Load Duration

Wood stress properties are affected by the duration of the maximum applied load. The shorter the duration, the greater the maximum load that can be carried. Design values for round timber piles established in this manual are based on short-term tests. Normal load duration values in this manual represents a load that fully stresses a member to its allowable design value for a cumulative duration of 10 years (dead plus live load). For a duration of load greater than 10 years, the working stress is reduced by 10% (typically dead load, no live load).

3.6.2 Temperature

The strength of wood is a function of the in-service temperature of the wood. Wood at higher temperatures is not as strong as the same material at lower temperatures. Wood heated to temperatures above 100°F for extended periods of time lose strength. The correction factor for temperature should be selected from Table 3-10.

3.6.3 Pressure Treatment

Timber piles should be treated in accordance with American Wood-Preservers' Association standards (see chapter 11 on specifications). The non-treated load correction factor provided in Table 3-9 applies for piles that are either air-dried prior to treatment or are not treated.

3.6.4 Size

The average bending stress of round wood sections based on standard beam formulas is greater than that of matched rectangular sections. However, the section modulus of a round beam is less than (1/1.18) that of a square beam of equivalent cross sectional area by approximately the same ratio of the rounded member to that of a rectangular member.

The clear wood bending stress in ASTM D 2555 is based on rectangular sections. The correction factor for size applies only to bending stress and is determined using the following equation :

$$C_f = (12/d)^{1/9} \leq 10 \qquad (3\text{-}5)$$

where : d = pile diameter (greater than 13.5 inches)

For pile diameters less than 13 inches the adjustment factor for size is 1.0.

3.6.5 Load Sharing

Timber piles are commonly connected by reinforced concrete caps or equivalent distribution elements, resulting in the pile cluster deforming as a single member under axial or bending load. The load carrying capacity of these pile clusters is greater than the sum of the individual pile capacities as a result of load sharing.

Table 3-10
Adjustment Factors for Timber Piles

Factors		Compression Parallel	Bending	Horizontal Shear	Compression Perpendicular	Modulus of Elasticity
Load Duration (C_{ld})	≤ 10 yrs	1.0	1.0	1.0	1.0	na
	> 10 yrs	0.9	0.9	0.9	0.9	na
Temperature (C_t)	T≤100°F	1.0	1.0	1.0	1.0	1.0
	100°<T≤125°F	0.7	0.7	0.7	0.7	0.9
	125°<T≤150°F	0.5	0.5	0.5	0.5	0.9
Untreatment Factor (C_u)	Southern Pine	1.18	1.18	1.18	1.18	1.0
	Douglas Fir	1.11	1.11	1.11	1.11	1.0
Size(C_f)		1.0	$C_f = (12/d)^{1/9} \leq 10$	1.0	1.0	1.0
Load Sharing (C_{ls})	Single pile	0.8	0.77	na	Na	na
	Cluster	1.0	1.0	na	Na	na

3.6.6 Allowable Stress

The allowable stress is determined from the working stress multiplied by factors that account for wood fiber density, duration of load, service temperature, pressure treatment, pile size, effect of single pile versus group pile, critical section and bearing area. The following equation shall be used to determine the allowable stress of round timber piles ($C_{\parallel a}$, f_a, $C_{\perp a}$, σ_a, E_a):

$$\text{Allowable stress} = (\text{working stress } C_{ld} \times C_t \times C_u \times C_f \times C_{ls}) \qquad (3\text{-}6)$$

The minimum pile butt and tip diameters specified in ASTM D25 should be the basis for design.

3.7 PRESERVATIVE PROCESS

Timber piles are potentially susceptible to biological attack from fungi, marine borers and insects. Pressure treatment of timber piles has proven to be an effective means of protection from biological attack. There are two broad types of wood preservatives used in today's pressure treating process for timber piles; oil-borne systems (primarily creosote), and waterborne preservative systems (Chromated Copper Arsenate (CCA) and Ammoniacal Copper Zinc Arsenate (ACZA)). ACZA is primarily used for Douglas fir.

The American-Wood Preserver's Association (AWPA) develops and maintains Preservative and Treating Standards for various products and uses including land, freshwater and marine piling. These standards should be reviewed and referenced to identify preservative treatment. In Canada, the Canadian Standards Association standard CSA 080.3 is the treatment standard for timber piles. The following is a general description of the most common preservatives used in piling applications.

3.7.1 Creosote

Creosote has been widely used to protect wood from biological attack since 1865. It is a distillate of tar produced by the carbonization of bituminous coal consisting of various polyaromatic hydrocarbons over a wide range of boiling temperatures. Common applications for creosote pressure treated timber products include timber piling for foundations on land, in fresh water, and in salt water, bridge timber and railroad ties.

3.7.2 Chromated Copper Arsenate (CCA)

Chromated Copper Arsenate (CCA) is a formulation of copper, chromium and arsenic, dissolved in an acidic aqueous solution. It was first developed in 1933 and has been widely used throughout the world as a wood preservative for 60 years. CCA combines the fungicidal properties of copper with the insecticidal properties of arsenic pentoxide. In CCA the fixation of arsenic and copper is dependent on the presence of chromium.

3.7.2.1 **CCA Industrial Uses**

CCA label holders are voluntarily withdrawing CCA treated wood from the retail trade effective December 31, 2003. However, existing inventories may be sold for an indefinite period.

Although CCA is completely safe for use in all markets where it has been traditionally used, other preservative treatments, which are approved and included in AWPA Standards, are available for the retail market.

The EPA has recognized the continued use of CCA for industrial uses and includes foundation piling, marine piling and structures, utility poles and construction poles in the list of approved industrial uses.

3.7.3 Ammoniacal Copper Zinc Arsenate (ACZA)

Ammoniacal Copper Zinc Arsenate (ACZA) is an improved formulation of the original Ammoniacal Copper Arsenate (ACA) and has been available since the early 1980's and has now replaced ACA in the AWPA Preservative Standards. The proportions of copper, zinc and arsenic in ACZA are 2:1:1 respectively. ACA and ACZA are alkaline preservative systems and

were formulated to achieve consistent penetration in the treatment of refractory, or difficult to treat wood species (i.e., Douglas Fir).

3.7.4 CCA and ACZA

Both CCA and ACZA in a waterborne form are carried into the wood cells within a closed pressure chamber. The metal oxides injected into the wood during treatment react with the wood fibers resulting in a bonding or fixation of the chemical in the wood. This forms an insoluble compound and fixes the chemical within the wood fibers to resist leaching and provide long term protection of timber piles in service.

CCA and ACZA are commonly used for foundation piling and for both fresh and salt water piling as well as for marine structures. CCA is olive green in color and is commonly used for treatment of wood used for residential decks and fences. ACZA is a turquoise green and is primarily used in commercial structures where Douglas Fir is used.

3.7.5 Preservative Retention

The required amount of preservative that should be retained by timber piles is a function of the application that the pile will be used for and the preservative. Land use piles require less preservative than water use piles, and salt water applications require higher retention levels of preservatives than fresh water applications. Table 3-11 provides guidelines on amount of preservative required for each application.

3.7.6 Pentachlorophenol and Copper Naphthenate

Although pentachlorophenol and copper naphthenate are recognized in AWPA Standards for use in land or fresh water piling, their use for this purpose is rare. These preservatives are **not** recommended for use in AWPA Standards for salt water installations.

3.8 DURABILITY CONSIDERATIONS

Timber piles should be treated with a preservative to prevent degradation of the wood from insect attack. Typical environments where degradation is a concern exist when the pile is exposed to alternate wetting and drying cycles or located above the water table. Insect damage reduces the service life of timber piles significantly, unless the pile is treated with a wood preservative. The most common treatments for timber piles are Creosote, Chromated Copper Arsenate (CCA) for Southern Yellow Pine and other species, and Ammoniacal Copper Zinc Arsenate (ACZA) for Douglas Fir. Treated timber piles are durable structural elements.

Durability of round timber piles is a function of site specific conditions. **FHWA has concluded that :**

- **Foundation piles submerged in ground water will last indefinitely**
- Fully embedded, treated foundation piles partially above the groundwater with a concrete cap will last 100 years or longer.
- Treated trestle piles over land will last about 75 years in northern areas and about 40 years in southern areas of the United States.

- Treated piles in fresh water will last about five to ten years less than land trestle piles in the same area

- For treated piles in brackish water, the longevity should be determined by the experience in the area

- Treated marine piles will last about 50 years in northern climates and 25 years in southern climates.

Round timber pile treatment should be in accordance with the American Wood Preservers' Association standard, C3-99 *Piles-Preservative Treatment by Pressure Processes.*

3.9 ENVIRONMENTAL CONSIDERATIONS

Timber piling is a major material used to construct piers, docks buildings , walkways, and decks used in and above aquatic environments. The pressure treated wood products industry is committed to assuring its products are manufactured and installed in a manner which minimizes any potential for adverse impacts to these important environments. To achieve this objective the industry has developed and encourages the use of Best Management Practices (BMPs). The BMPs for treated timber piles are available from AWPI.

There are a variety of treatments and treated wood products approved for use in or above aquatic environments. Because of inherent differences in the treatment chemical and the processes there are also a number of BMPs. While the goal of the BMPs is common (i.e., to minimize the migration or leaching of treating chemicals into the environment) the methods for achieving the goal vary. It is the responsibility of the treating firm to assure that the materials leaving the plant destined for use in aquatic environments have been produced in accordance with the BMPs.

To assure timber piles utilized in aquatic environments incorporate BMPs the following steps should be followed:

1. Specify the appropriate material in terms of performance as defined in the American Wood Preservers' Association Standards.
2. Specify that the material be produced in compliance with the industry standards BMPs.
3. Require assurance that the products were produced in compliance with the BMPs.

Table 3-11
Preservative Assay Retention Requirements

	Creosote (pcf)		Waterborne (CCA or ACZA) (pcf)	
Use Category	Southern Pine	Douglas Fir	Southern Pine CCA	Douglas Fir ACZA
Foundation	12	17	0.8	1.0
Land & Fresh Water	12	17	0.8	1.0
Marine				
N. of Delaware[1] or San Francisco[1]	16	16	1.5	1.5
S. of New Jersey[2] or San Francisco[2]	20	20	2.5	2.5
Dual Treatment[3]	20	20	1.0	1.0

1. Where Teredo is expected and Limnoria tripunctata is not expected, creosote or creosote solutions provide adequate protection.
2. Where Teredo and Limnoria tripunctata are expected and where pholad attack is not expected, either dual treatment, or high retentions of CCA for Southern Pine or ACZA for Douglas fir provide maximum protection.
3. In those areas where Limnoria tripunctata and pholad attack is expected or known, dual treatment provides the maximum protection.

CHAPTER 4.0
STATIC ANALYSIS DESIGN PROCEDURES

4.1 INTRODUCTION

Static analysis methods are simplified analytical techniques used to model the very complex soil-structure interaction between driven piles and the surrounding soils. The analysis techniques that are presented in this manual have been selected because they have been proven to provide reasonable agreement with full scale field results. The techniques that will be presented here include the Meyerhof Method and the Nordlund Method for piles founded in cohesionless soils, the Alpha (α) Method and the Effective Stress Method for cohesive soils, and the Nottingham Schmertmann Method when CPT data is available. These methods have also been selected for presentation because they are relatively straightforward to use, and are the techniques that are recommend by the Federal Highway Administration (FHWA-HI-97-013).

It is strongly recommended that prior to using any of the static methods presented in this chapter that the user be familiar with the limitations of that analytical technique. In conjunction with static analysis, it is also recommended that static load tests be conducted to further calibrate the empirical models for the regional geology, to perform wave equation analysis and to perform dynamic monitoring during installation. These tools are essential in assuring that the design objectives are accomplished.

4.2 SOIL/PILE INTERACTION

The ultimate capacity of a pile is limited by the structural capacity of the pile (Chapter 3) and the capacity of the surrounding soil to support the loads transferred from the pile. This transfer of stress between the soil and pile is quantified by two components: the resistance that is developed along the shaft of the pile (R_s = shaft resistance) and the resistance that is developed at the bottom (toe) of the pile (R_t = toe resistance).

The process of driving piles affects the soil/pile interaction. The effects of this installation disturbance on the soil/pile interaction is briefly explained here. Timber piles are considered to be a displacement type pile (versus a non-displacement pile (i.e., H pile). In cohesionless soils, displacement piles disturb a zone around the pile by a lateral distance of 3 – 5.5 pile diameters and 3 – 5 diameters below the tip of the pile (Broms, 1966). Figure 4-1 shows the limits of this pile disturbance. For loose cohesionless soils, the disturbance from driving the displacement pile increases the relative density of the soil. This increased relative density increases the capacity of single piles and pile groups and is a major advantage of timber piles driven into cohesionless soils.

The pile driving process can, also in addition to increasing the density of loose cohesionless soils, generate high positive porewater pressures in saturated loose to medium fine sands. Positive pore pressures temporarily reduce the soil shear strength and the pile capacity; as the pore pressure dissipates, the pile capacity increases. This phenomenon is called “pile set up” and is generally quicker for sands and silts than for clays, because these types of soils are more permeable than clays, and pore pressures dissipate more rapidly.

In dense cohesionless soils, the disturbance from the pile driving may decrease the relative density of the surrounding soil. In these dense soils, the increase in horizontal stress in the soil adjacent to the pile during driving may be lost by “relaxation”. This phenomenon occurs as the negative pore pressure generated during the driving dissipates. The negative pore pressure occurs because of the dilation of the dense sand into a lower relative density. The negative pore pressure temporarily increases the soil shear strength by effectively increasing the normal stress on the failure surface. As the negative pore pressure dissipates, the shear strength and pile capacity decrease.

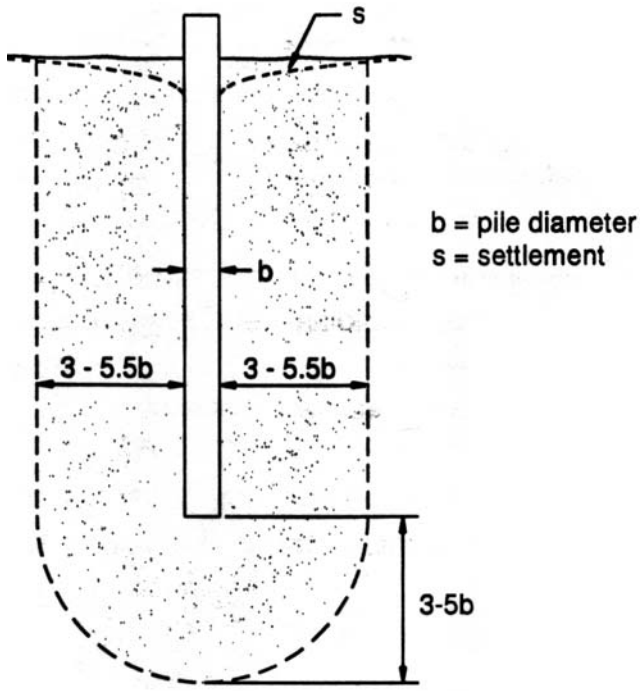

Figure 4 - 1 Compaction of Cohesionless Soils During Driving of Piles (Broms, 1966)

For cohesive soils, the soil pile interaction is different than for cohesionless soils. Soft, normally consolidated clays have a zone of disturbance around the pile both laterally, and at the toe of the pile, of approximately one pile diameter (Figure 4-2). The process of driving displacement piles in cohesive soils typically generates high positive pore water pressure. This increase in pore water pressure temporarily decreases the shear strength of the soil and the load carrying capacity of the pile. Reconsolidation of the cohesive soil and dissipation of the excess pore pressure results in an increase in shear strength and pile capacity. This is commonly referred to as “pile setup”.

4.2.1 Load Transfer

The ultimate bearing capacity (Q_u) of a timber pile in homogeneous soil is the sum of the shaft reisistance (R_s) and the toe resistance (R_t):

$$Q_u = R_s + R_t \qquad (4\text{-}1)$$

The shaft resistance may be expressed as the product of the unit shaft resistance (f_s) times the shaft surface area (A_s), and the toe resistance may be expressed as the product of the unit toe resistance (q_t) times the area of the toe (A_t). Equation 4-1 may be rewritten in unit resistance terms as follows:

$$Q_u = f_s A_s + q_t A_t \qquad (4\text{-}2)$$

The equations presented here assume that both the pile toe and shaft have moved a sufficient distance with respect to the adjacent soil to simultaneously mobilize the ultimate shaft and toe resistance. It should be noted that the displacement needed to mobilize the shaft resistance is generally smaller than that required to mobilize the toe resistance.

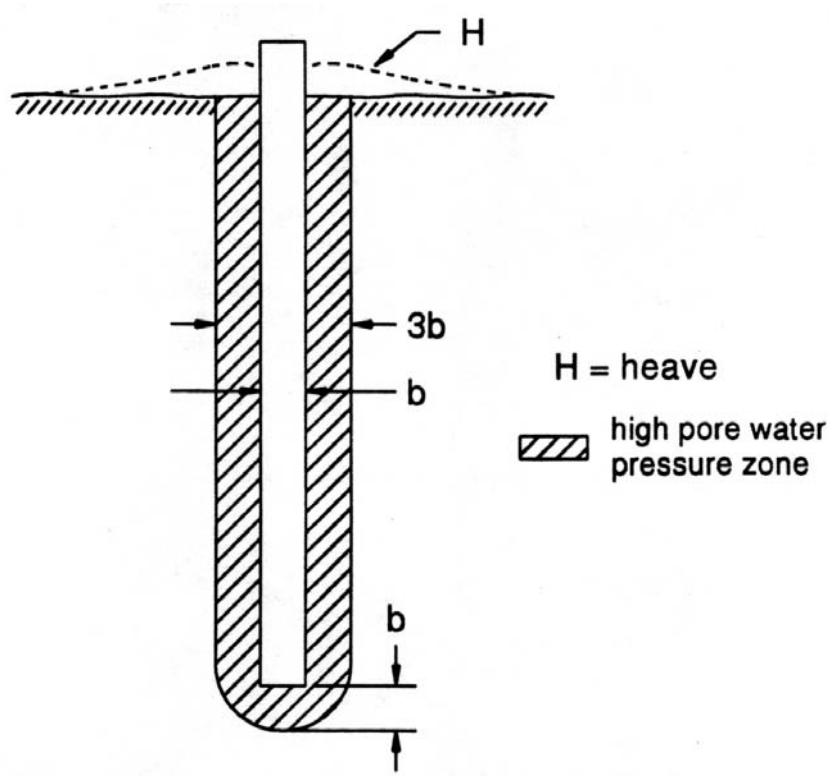

Figure 4 - 2 Disturbance of Cohesive Soils During Driving of Piles (Broms, 1966)

Figure 4-3 shows the typical load transfer profiles for piles. The axial load in the pile is a combination of the shaft resistance and toe resistance. Figure 4-3a shows the case when no shaft resistance is developed and the ultimate capacity of the pile is developed through toe resistance. Figure 4-3b shows the load transfer profile for the case where uniform shaft resistance is developed along the length of the pile. For this case, the resistance at the toe of the pile is due to the toe resistance. Moving up the pile, the ultimate resistance increases linearly due to the uniform shaft resistance until the top of the pile is reached, and is typical for piles in normally consolidated cohesive soils. Figure 4-3c shows the case for a triangular distribution of shaft resistance. This is the typical case for a pile in cohesionless soils.

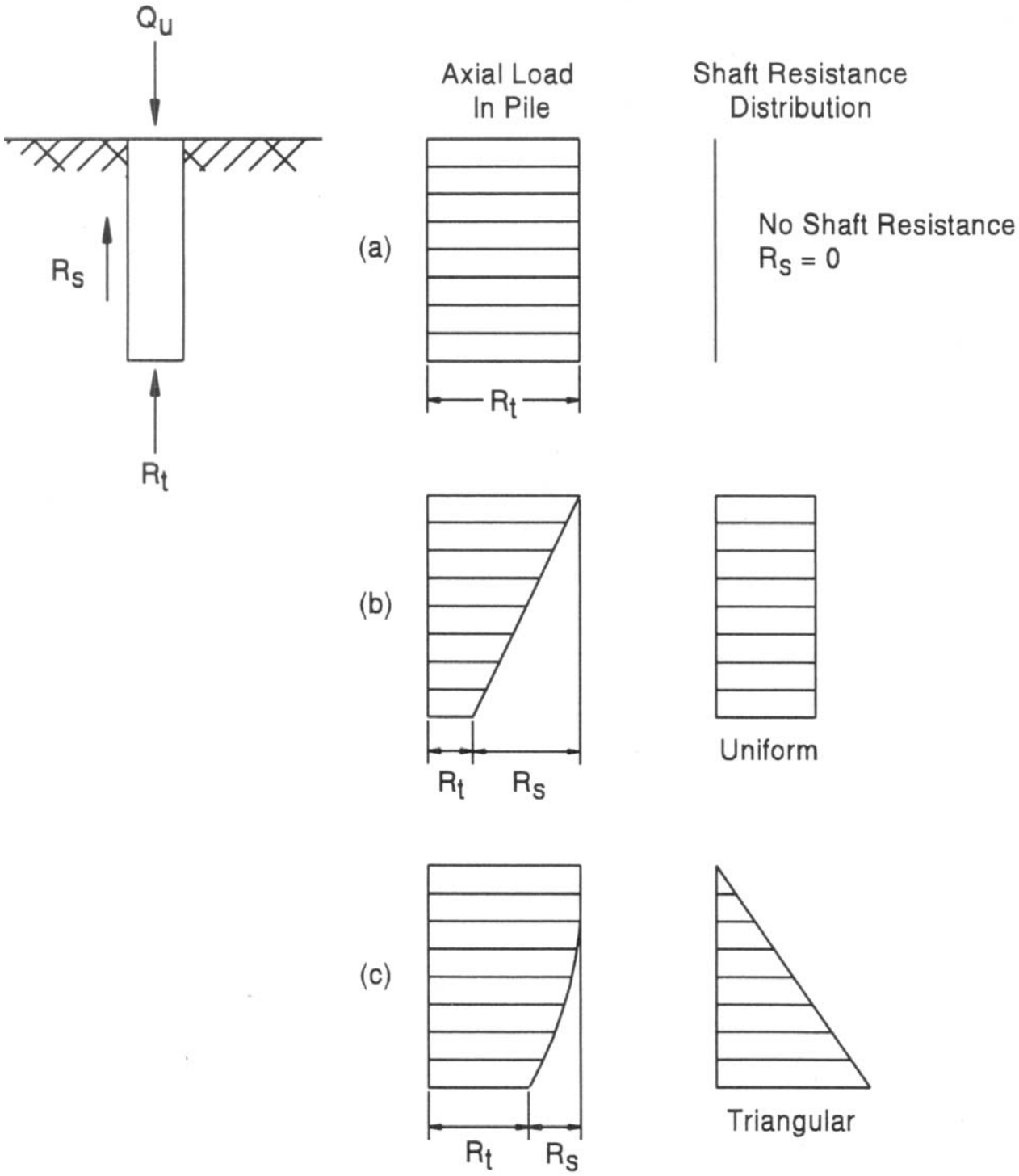

Figure 4 - 3 Typical Load Transfer Profiles

4.3 FACTORS OF SAFETY

Static analysis of piles is used to determine the ultimate capacity of a single pile or pile group. The allowable capacity of the pile is the ultimate capacity divided by a factor of safety. The factor of safety typically ranges between 2 to 4 and is dependent on:

- Level of confidence in the input design parameters
- Variability of the soil profile
- Method of static analysis
- Effects of proposed installation method
- Level of construction monitoring

The first two items typically govern the factor of safety that geotechnical engineers use for assessing the appropriate factor of safety for a geotechnical design of a shallow or deep foundation, for slope stability or for earth retaining structures. Engineering judgment should be used in evaluating the risk associated with the unknowns in a project, and then selecting the appropriate factor of safety. Many of the static analysis methods are documented in the literature with specific recommendations on the factor of safety to be used with them. These recommended factors of safety typically do not consider the variability of the soil profile, the confidence in the input parameters nor the level of construction monitoring. These items should also be considered when selecting the factor of safety for design. While the range in static factors of safety is from 2 to 4, most of the static analysis methods recommend a factor of safety of 3. It is the responsibility of the design engineer to determine the appropriate factor of safety for the specific application/project. When static load tests are performed, a factor of safety of 2.0 is often used because of the high level of confidence that the piles will perform as intended.

4.4 ENGINEERING NEWS RECORD FORMULA

The AWPI Timber Piling Council recognizes that the Engineering News Formula is still in use. However, more predictable procedures are provided in this manual for determining the static capacity of timber piles.

Some years ago, studies evaluating the degree of accuracy of this Formula demonstrated there was no satisfactory relationship between the capacity of piles determined by load tests versus calculated by the Engineering News Formula. When using the formula, the actual bearing capacity may be less than 1.2 or greater than 30 times the calculated value. “In view of these conditions the continued use of the Engineering News Formula can no longer be justified, (Terazghi and Peck, 1967).” The Engineering News formula, although not used for piling design, is used on-site as a quality control tool.

CHAPTER 5.0
DESIGN OF SINGLE PILES

5.1 INTRODUCTION

The methods to determine the static capacity of single piles presented in this chapter have been selected because of their simplicity and excellent track record for predicting pile capacity when compared to pile load tests. A step-by-step procedure is presented for each method. Each procedure is taken from the FHWA manual "Design and Construction of Driven Pile Foundations (FHWA-HI-97-013). The methods presented in this manual and when they are applicable is provided in Table 5-1.

Table 5-1
Design Methods

Design Method	Cohesionless Soil	Cohesive Soil	Applicable for Final Design
Meyerhof	Yes	No	No
Nordlund	Yes	No	Yes
α Method	No	Yes	Yes
Effective Stress	Yes	Yes	Yes
Nottingham & Schmertmann	Yes	Yes	Yes

5.2 MEYERHOF METHOD FOR PILES IN COHESIONLESS SOILS (Meyerhof, 1976)

Meyerhof developed a method of estimating pile capacity based on empirical correlations between standard penetration test (SPT) results and static pile load tests. The advantages of this method are that it is very easy to use and that SPT data is typically available for a project. The major disadvantage of this method is that SPT values are non-reproducible and can be influenced by many factors (i.e., rod length, hammer efficiency, overburden depth, etc.). Because of the simplicity of the method, many simplifying assumptions are contained in the method, resulting in a less reliable method than the other methods presented in this manual. **This method should be used for preliminary estimates and not for final design.**

For displacement piles (e.g., timber piles) Meyerhof has established that the average unit shaft resistance (f_s) is:

$$f_s = {2\overline{N}'}/{50} \leq 2 \text{ ksf} \qquad (5\text{-}1)$$

$\overline{N}'$ is the average corrected SPT resistance in blows per foot

The unit toe resistance (q_t) in ksf for piles driven into sands and gravels may be approximated by the following equation:

$$q_t = 8\overline{N}'_o + [(0.8\overline{N}'_B - 0.8\overline{N}'_O)D_B] \div b \leq 8\overline{N}'_B \quad (5\text{-}2)$$

where:

$\overline{N}'_O$ = Average corrected SPT N' value for the stratum, overlying the bearing stratum

$\overline{N}'_B$ = Average corrected SPT N' value for the bearing stratum

D_B = Pile embedment depth into the bearing stratum in feet

b = Pile tip diameter in feet

Equation 5-2 applies when the pile toe is located near the interface of two strata, with the weaker stratum above the bearing stratum. The limiting value of the unit toe resistance is reached when the embedment depth into the bearing stratum reaches 10 pile diameters.

For piles driven into a uniform cohesionless stratum, the unit toe resistance in ksf is determined from the following equation:

$$q_t = 0.8\overline{N}'_B D_B \div b \leq 8\overline{N}'_B \quad (5\text{-}3)$$

It is recommended that the average corrected SPT N' value $\overline{N}'_B$ be calculated by averaging N' values within the zone extending 3 diameters below the pile toe. For piles driven into non-plastic silts, Meyerhof recommended the unit toe resistance, q_t, be limited to 300 $\overline{N}'_B$ instead of the 400 $\overline{N}'_B$ given in the above equation.

STEP BY STEP PROCEDURE FOR MEYERHOF METHOD (FHWA-HI-97-013)

Step 1 Correct SPT field N values for overburden pressure.
Use correction factors from Figure 5-1.
$N' = C_N N$

where:
- N' = corrected SPT N value
- C_N = correction factor for overburden stress (Figure 5-1)
- N = uncorrected or field SPT value

Step 2 Compute the average corrected SPT N' value $(\overline{N}')$ for each soil layer.
Along the embedment length of pile delineate the soil profile into layers based on density indicated by the N' value. The individual soil layers should be selected between 10 and 20 feet.

Step 3 Compute the unit shaft resistance in ksf for timber piles from:

$$f_s = 2\overline{N}'/50 \leq 2$$

Step 4 Compute ultimate shaft resistance R_s (kips)

$$R_s = f_s A_s$$

where: A_s = pile shaft surface area = (perimeter) x (embedded length)

Step 5 Compute the average corrected SPT N' values $(\overline{N'}_O)$ and $(\overline{N'}_B)$ near the pile toe.

In cases where the pile toe is situated near the interface of a weaker stratum overlying the bearing stratum, compute the average corrected SPT N' value for the stratum overlying the bearing stratum, $(\overline{N'}_O)$, and the average corrected SPT N' value for the bearing stratum $(\overline{N'}_B)$.

In uniform cohesionless soils, compute the average corrected SPT N' value by averaging N' values within the zone extending 3 diameters below the pile toe.

Step 6 Compute the unit toe resistance q_t

For weaker soils overlying the bearing stratum, compute q_t from:

$$q_t = 8\overline{N'}_o + (0.8\overline{N'}_B - 0.8\overline{N'}_O)D_B \div b \leq 8\overline{N'}_B$$

For pile in a uniform cohesionless deposit, compute q_t from:

$$q_t = 0.8\overline{N'}_B D_B \div b \leq 8\overline{N'}_B$$

For pile driven into non-plastic silts, the unit toe resistance should be limited to $0.6\overline{N'}_B$ ksf.

Step 7 Compute the ultimate toe resistance R_t (kips)

$$R_t = q_t A_t$$

Where A_t is the pile toe area (ft^2).

Step 8 Compute the ultimate pile capacity (kips)

$$Q_u = R_s + R_t$$

Step 9 Compute the allowable design load Q_a (kips)

$$Q_a = Q_u / \textit{factor of Safety}$$

The Meyerhof Method should be used only for preliminary capacity and length estimates.

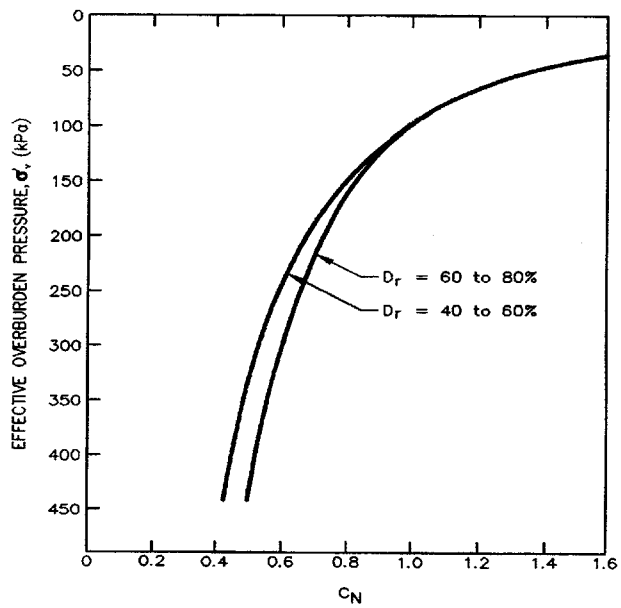

Figure 5-1: Chart for Correction of N-Values in Sand for Influence of Overburden Pressure (from Peck, Hanson, Thornburn, 1974)

5.3 NORDLUND METHOD FOR PILES IN COHESIONLESS SOILS (1963)

The Nordlund method considers the type of the pile (i.e. coefficient of friction between the pile material and soil, displacement versus non-displacement, etc.) and the soil pile interaction in calculating the shaft resistance. The shaft resistance of a pile is a function of several parameters including the following:

- Friction angle of the soil
- Friction angle of sliding surface (soil/pile interface)
- Taper of the pile
- Effective unit weight of the soil
- Pile length
- Minimum pile perimeter
- Volume of soil displaced

The Nordlund method attempts to take these parameters into consideration when evaluating pile capacity. This method is a semi-empirical approach that is widely used.

The Nordlund Method (Figure 5-2) equation for computing the ultimate capacity of a pile is as follows:

$$Q_u = [\sum_{d=0}^{d=D} K_\delta \, C_F \, p_d \, sin(\delta + \omega) C_d \, \Delta d \div cos\, \omega] + \alpha_t N'_q \, A_t p_t \qquad (5\text{-}4)$$

where:

d	=	Depth
D	=	Embedment pile length
K_δ	=	Coefficient of lateral earth pressure at depth d

C_F	=	Correction factor for K_δ when $\delta \neq \varphi$
p_d	=	Effective overburden pressure at the center of depth increment d
δ	=	Friction angle between pile and soil
ω	=	Angle of pile taper from vertical
φ	=	Soil effective friction angle
C_d	=	Pile perimeter at depth d
Δd	=	Length of pile segment
α_t	=	Dimensionless factor (dependent on pile depth-width relationships)
N'_q	=	Bearing capacity factor
A_t	=	Pile toe area
p_t	=	Effective overburden pressure at the pile toe (limited to 3 ksf).

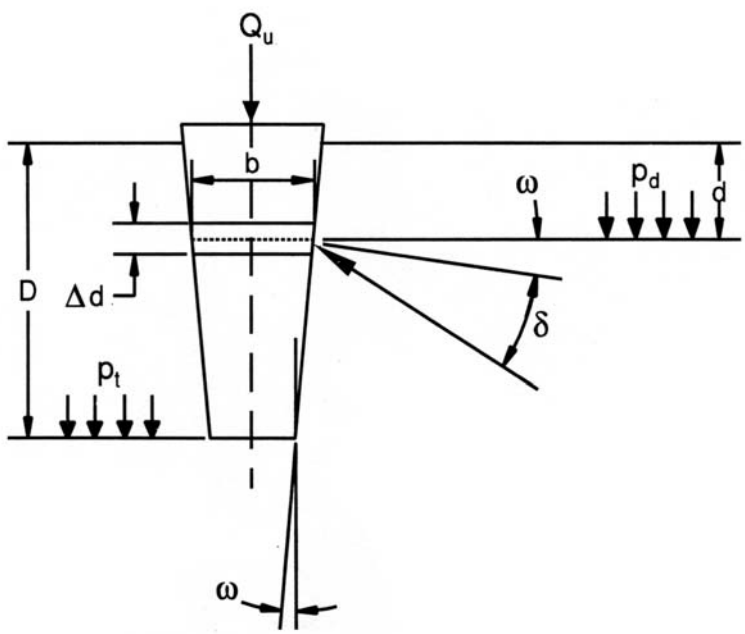

$$Q_u = \sum_{d=0}^{d=D} K_\delta \, C_F \, p_d \, \frac{\sin(\delta+\omega)}{\cos\omega} \, C_d \, \Delta d + \alpha_t \, N'_q \, A_t \, p_t$$

Figure 5-2 Nordlund's General Equation for Ultimate Pile Capacity (FHWA-HI-97-013)

STEP BY STEP PROCEDURE FOR NORDLUND METHOD (FHWA-HI-97-013)

Step 1 Delineate the soil profile into layers and determine the φ angle for each layer.

A.) Construct an effective overburden pressure (p_o) diagram versus depth.

B.) Correct the SPT field N values for overburden pressure using Figure 5-1. Delineate soil profile into layers based on corrected SPT N' values

C.) Determine φ angle for each layer of soil from laboratory tests or in-situ data.

D.) In the absence of laboratory or in-situ test data, determine the average corrected SPT N' values $(\overline{N'})$ for each soil layer and determine φ angle from Table 5-1.

Table 5-1
Empirical Correlation for Effective Friction Angle of Granular soils based on Corrected SPT Value (after Bowles, 1977)

Description	Very Loose	Loose	Medium	Dense	Very Dense
Corrected N'	0 to 4	4 to 10	10 to 30	30 to 50	50+
φ angle**	25 - 30°	27 - 32°	30 - 35°	35 to 40°	38 - 43°

* Corrections may be unreliable in soils containing gravel.
** Use larger values for granular material with 5% or less fine sand and silt.

Step 2 Determine the friction angle between the pile and soil (δ) based on the displaced soil volume (V) and the soil friction angle (φ).

A.) Compute the volume of soil displaced per unit length of pile (V).

B.) Use Figure 5-3 to determine the ratio of the pile soil friction angle to the soil friction angle δ/φ.

C.) Calculate δ based on δ/φ ratio.

Step 3 Determine the coefficient of lateral earth pressure K_δ for each φ angle.

Determine K_δ for each φ angle based on displaced volume ,V, and pile taper angle (ω) using Figures 5-4 – 5-7 and the appropriate procedure in steps 3 A, B, or C.

A.) If the displaced volume is 0.1, 1, or 10 ft^3/ft, which corresponds to one of the curves in Figures 5-4 through 5-7, and the soil friction angle is one of those provided, K_δ may be determined directly from the appropriate figure.

B.) If the displaced volume is 0.1, 1, or 10 ft^3/ft, which corresponds to one of the curves provided in Figures 5-4 through 5-7, but the effective friction angle (φ) is different from those provided, use a linear interpolation to determine K_δ for the required φ (see FHWA-HI-97-013 for additional detail).

C.) If the displaced volume is other than 0.1, 1, or 10 ft^3/ft, which corresponds to one of the curves provided in Figures 5-4 through 5-7, but the effective friction angle (φ) is one of those provided, use a log linear interpolation to determine K_δ for the required volume (see FHWA-HI-97-013 for additional detail). For preliminary designs K_δ may be estimated by visual estimation between curves in Figures 5-4 through 5-7.

Step 4 Determine the correction factor, C_F, to be applied to K_δ if $\delta \neq \varphi$.

Use Figure 5-8 to determine the correction factor for each K_δ.

Step 5 Compute the average effective overburden pressure at the mid-point of each layer (p_d).

Step 6 Compute the shaft resistance in each layer of soil. The sum of the shaft resistance from each layer obtained is equivalent to the ultimate shaft resistance R_s.

$$R_s = \sum_{d=0}^{d=D} K_\delta \, C_F \, p_d \, sin(\delta + \omega) C_d \, \Delta d \div cos\,\omega$$

Step 7 Determine the α_t coefficient and the bearing capacity factor, N'_q, from the friction angle of the soil near the pile toe.

A.) Use Figure 5-9a to determine α_t coefficient based on pile length to diameter ratio.
B.) Use Figure 5-9b to determine N'_q.

C.) If the friction angle of the soil is estimated from SPT data, compute the average corrected SPT N' value over the zone from the pile toe to 3 diameters below the pile toe. Use this average corrected N' value to estimate the friction angle near the toe of the pile using Table 5-1

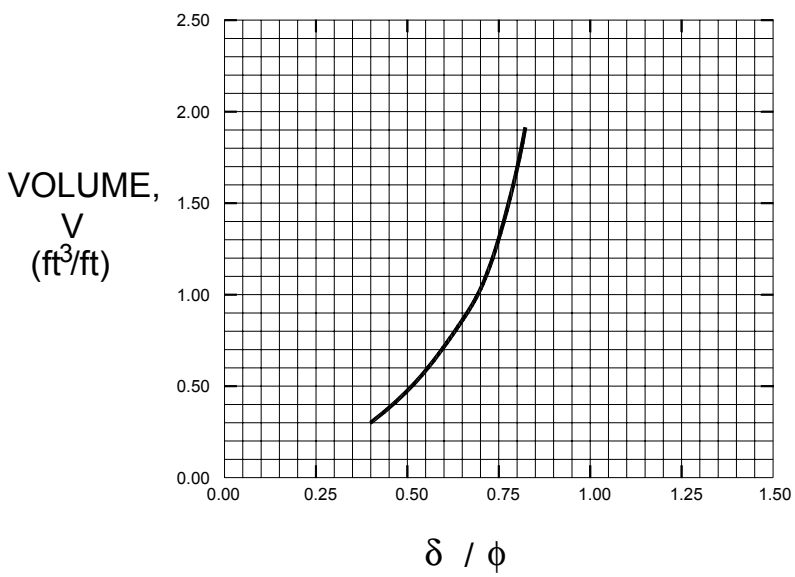

Figure 5-3: Relationship of δ/φ and pile displacement (V) for timber piles (after Nordlund, 1979)

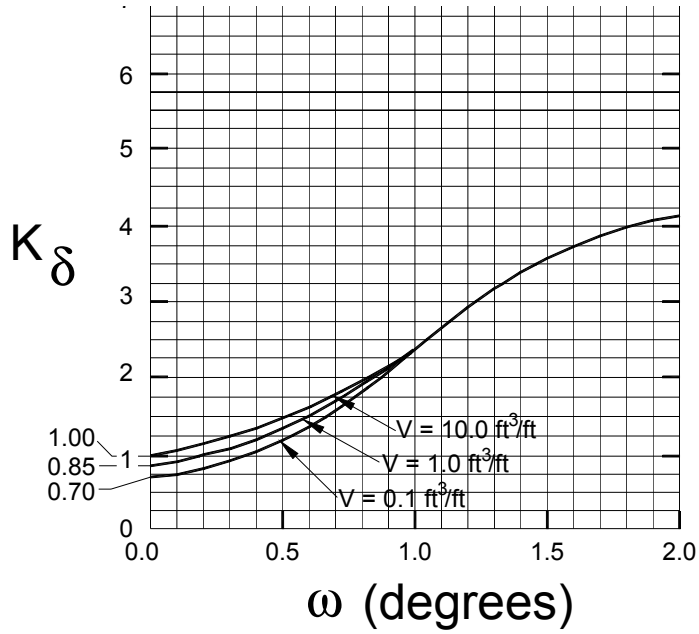

Figure 5-4: Design curve for evaluating K_δ for piles when φ = 25°(after Nordlund, 1979)

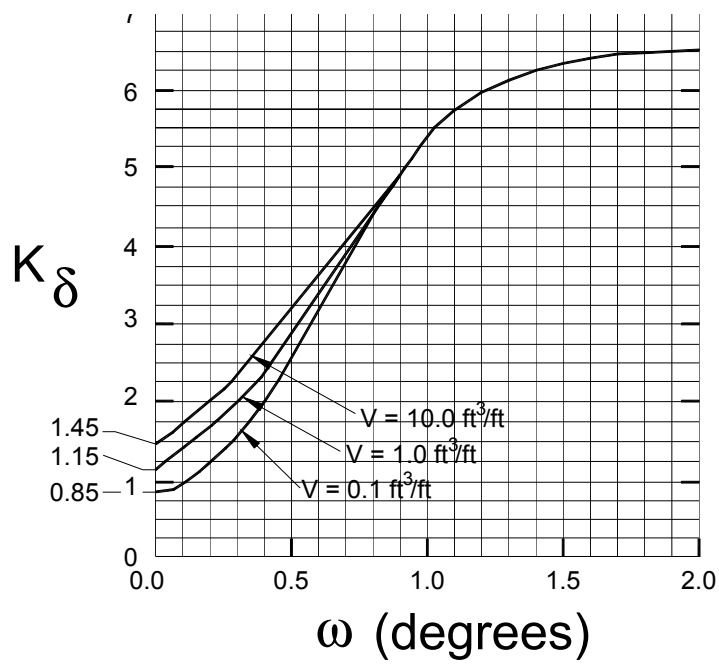

Figure 5-5: Design curve for evaluating K_δ for piles when φ = 30°(after Nordlund, 1979)

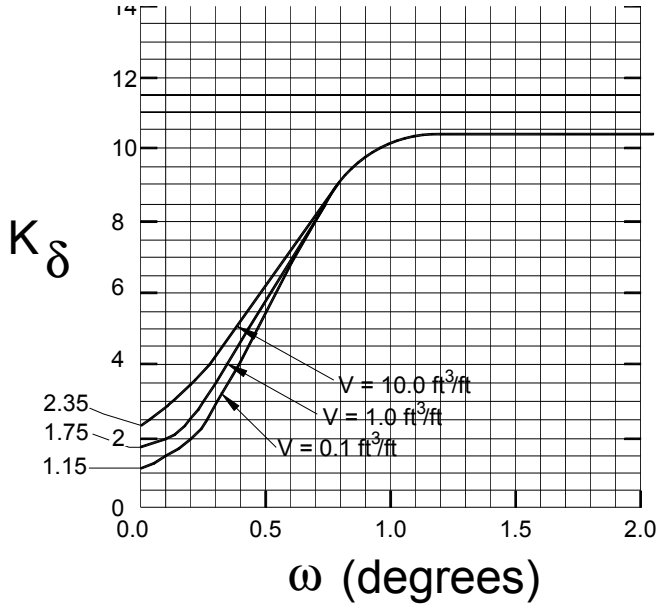

Figure 5-6: Design curve for evaluating K_δ for piles when φ = 35°(after Nordlund, 1979)

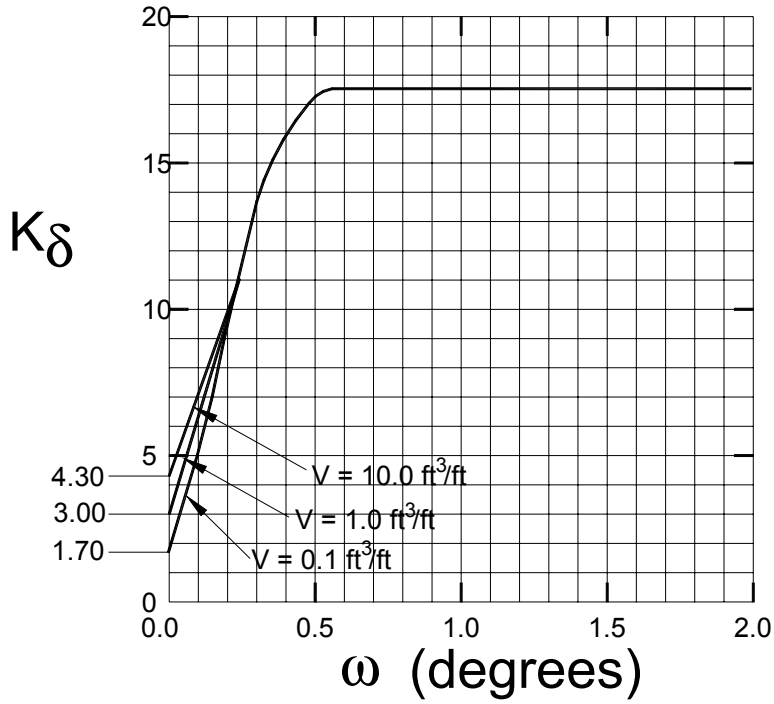

Figure 5-7: Design curve for evaluating K_δ for piles when φ = 40°(after Nordlund, 1979)

Step 8 Compute the effective overburden pressure at the pile toe p_t.

Note that the limiting value of p_t is 3 ksf.

Step 9 Compute the ultimate toe resistance R_t with the following two steps:

A.) $R_t = \alpha_t N'_q A_t p_t$

B.) Limit $R_t = q_l A_t$ where q_l is obtained from Figure 5-10 and the following two steps: 1.) With the friction angle near the toe of the pile determined from laboratory or in-situ test data; and 2.) With the friction angle of the soil estimated from SPT corrected values (N') and Table 5-1. Use the lesser of the two values.

Step 10 Compute the ultimate pile capacity (kips)

$Q_u = R_s + R_t$

Step 11 Compute the allowable design load Q_a (kips)

$Q_a = Q_u / \text{Factor of Safety}$

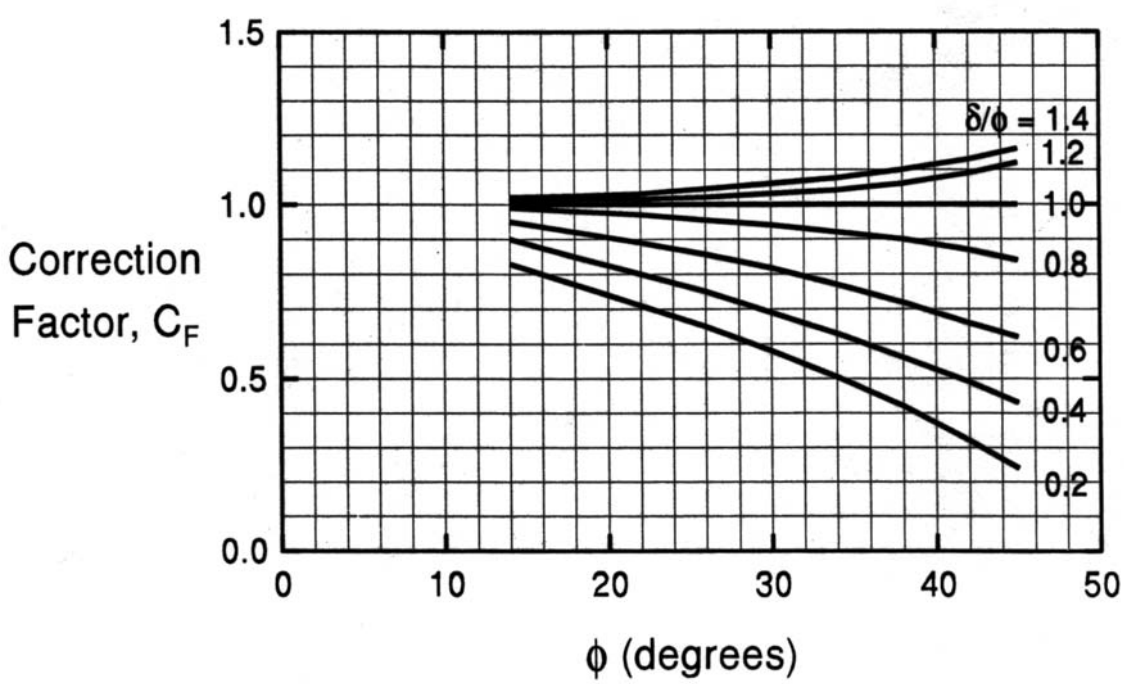

Figure 5-8: Correction Factor for K_δ when $\delta \neq \varphi$ (after Nordlund, 1979)

5.4 α- METHOD FOR PILES IN COHESIVE SOILS (Tomlinson, 1979)

The ultimate bearing capacity of a pile in cohesive soil may develop up to 80 – 90% of its capacity through shaft resistance. The α-Method is a total stress analysis where the ultimate capacity of the pile is determined from the undrained shear strength of the cohesive soil. This method assumes that the shaft resistance is independent of the effective overburden pressure. The unit shaft resistance is expressed in terms of an empirical adhesion factor times the undrained shear strength. The unit shaft resistance, f_s, is equal to the adhesion (c_a) which is the shear stress between the pile and the soil.

$$f_s = c_a = \alpha c_u \tag{5-6}$$

α is an empirical adhesion factor to reduce the average undrained shear strength (c_u) of the undisturbed clay along the embedded length of the pile. The coefficient α depends on the nature and strength of the clay, pile dimensions, method of installation, and time effects. Figure 5-11 should be used to determine the pile adhesion for the general case of a homogeneous soil profile. Figure 5-12a should be used when driving a pile through a layer of sand or sandy gravel which is above a stiff clay layer. This condition will typically develop the highest adhesion factors as the granular soil is dragged into the underlying clay. Figure 5-12b should be used for determining the adhesion for piles driven through soft clay into stiff clay. In this case, the soft clay is dragged into the stiff clay stratum reducing the adhesion factor of the underlying stiff clay.

Figure 5-12c may be used when driving piles in stiff clays without any different overlying strata. In stiff clays, a gap often forms between the pile and the soil in the upper portion of the pile. The adhesion factor is, therefore, reduced at shallow pile penetration depths and increased at deeper pile penetration depths.

The unit toe resistance is determined for homogeneous cohesive soil using the following equation:

$$q = c_u N_c \tag{5-7}$$

The term N_c is a dimensionless bearing capacity factor which depends on the pile diameter and depth of embedment. The bearing capacity factor is typically taken as 9.

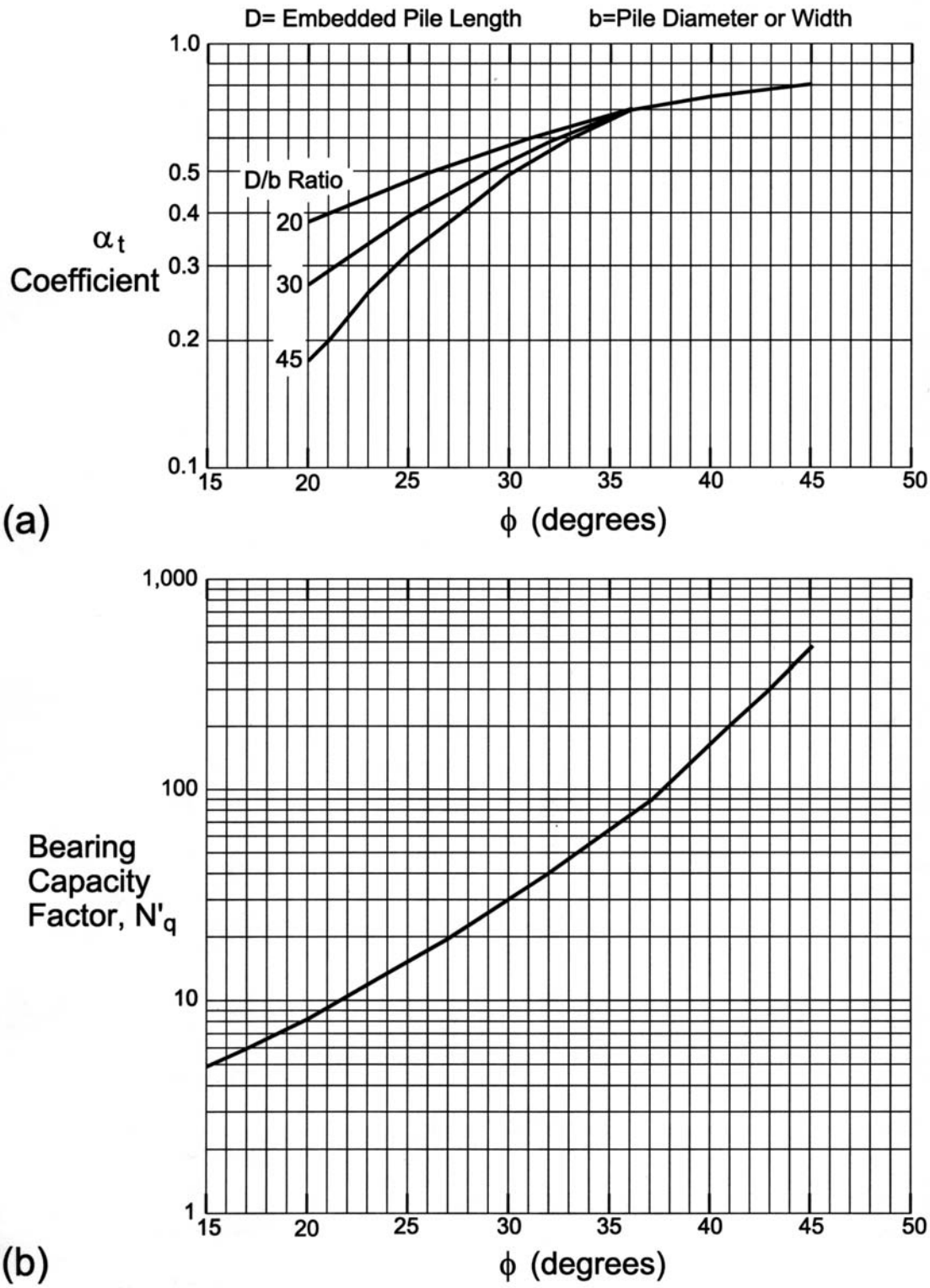

Figure 5-9: Chart for Estimating α_t Coefficient and Bearing Capacity Factor N'_q (Chart modified from Bowles, 1977)

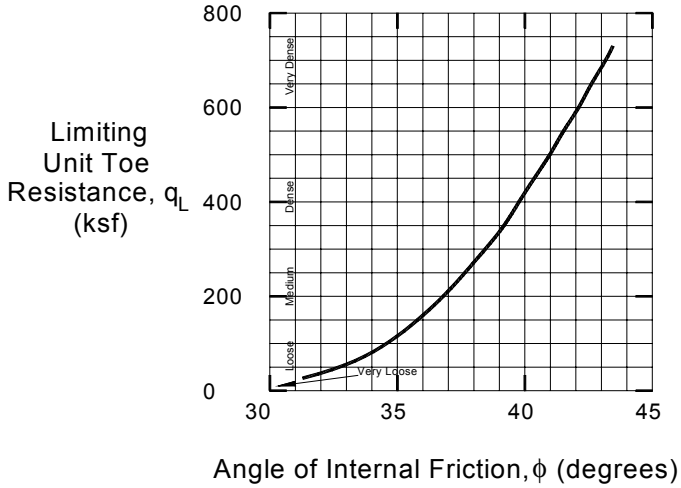

Figure 5-10: Relationship between maximum unit pile toe resistance and friction angle for cohesionless soils (after Meyerhof, 1976)

STEP BY STEP PROCEDURE FOR α-METHOD IN COHESIVE SOIL (FHWA-HI-97-013)

Step 1 Delineate the soil profile into layers and determine the adhesion, c_a, from Figure 5-11 or the adhesion factor, α, from Figure 5-12.

Step 2 For each soil layer, compute the unit shaft resistance, f_s.

$$f_s = c_a = \alpha c_u$$

Step 3 Compute the shaft resistance in each soil layer and the ultimate shaft resistance, R_s, from the sum of the shaft resistances for each layer.

$$R_s = \sum f_s A_s$$

where: A_s = pile shaft surface area = (perimeter) x (embedded length)

Step 4 Compute the unit toe resistance, q_t.

$$q_t = 9\ c_u$$

Step 5 Compute the ultimate toe resistance, R_t.

$$R_t = q_t A_t$$

Step 6 Compute the ultimate pile capacity (kips)

$$Q_u = R_s + R_t$$

Step 7 Compute the allowable design load Q_a (kips)

$Q_a = Q_u / \textit{Factor of Safety}$

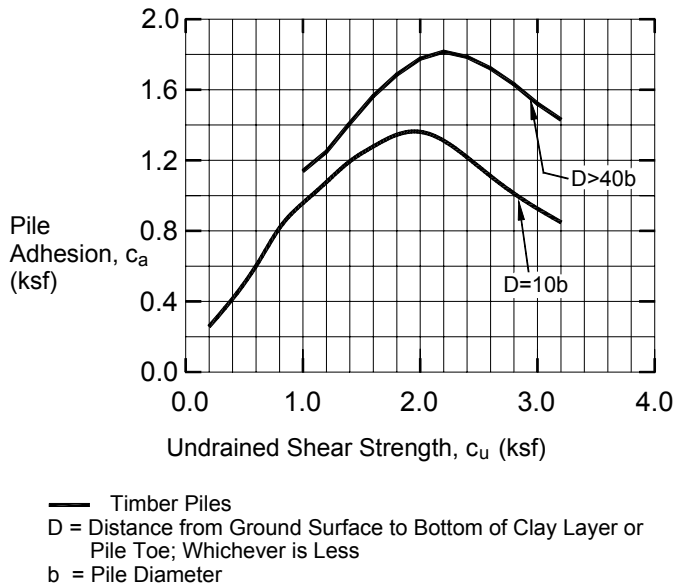

Figure 5-11: Adhesion values for piles in cohesive soils (after Tomlinson, 1979)

5.5 EFFECTIVE STRESS METHOD FOR PILES IN COHESIONLESS AND COHESIVE SOILS

The long-term drained shear strength conditions of piles may be effectively modeled using effective stress methods. The effective stress method presented in this manual is based on the calculation of the unit shaft resistance (f_s) using the following equation:

$$f_s = \beta \bar{p}_o \tag{5-8}$$

where:
- β = Bjerrum-Burland beta coefficient = $K_s \tan\delta$
- $\bar{p}_o$ = Average effective overburden pressure along the pile shaft
- K_s = Earth pressure coefficient
- δ = Friction angle between the pile and the soil

The unit toe resistance (q_t) is calculated from:

$$q_t = N_t p_t \tag{5-9}$$

where:
- N_t = Toe bearing capacity coefficient
- p_t = Effective overburden pressure at the toe of the pile.

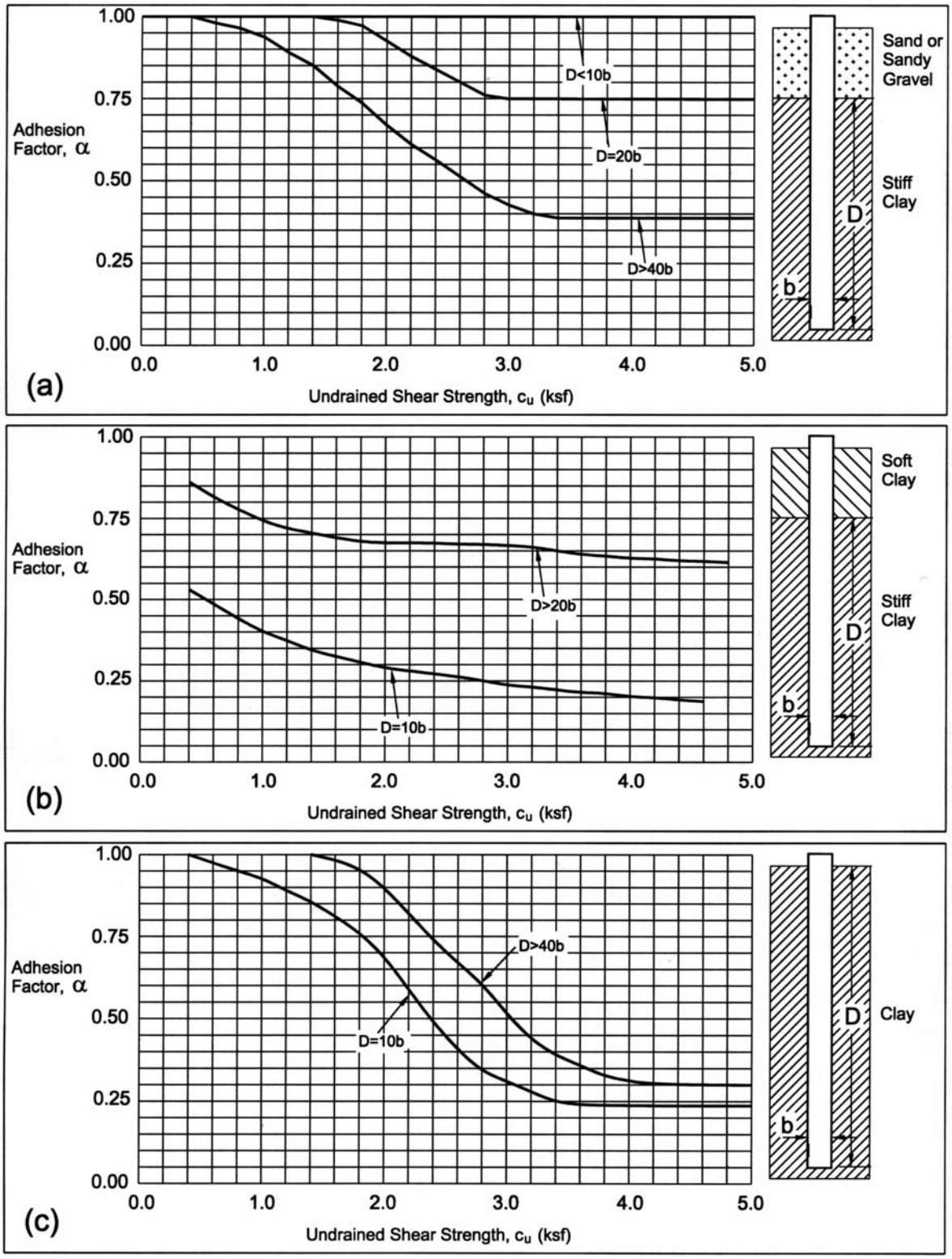

Figure 5-12: Adhesion factors for Driven Piles in Clay (after Tomlinson, 1980)

The toe bearing coefficient, N_t, and the beta coefficient, β, may be determined from Table 5-2 and Figures 5-13 and 5-14 may also be used to estimate the beta coefficient (β), and the toe bearing coefficient (N_t).

Table 5-2
Range of β and N_t coefficients (Fellenius,1991)

Soil Type	φ'	β	N_t
Clay	25 - 30	0.23 - 0.40	3 - 30
Silt	28 - 34	0.27 - 0.50	20 - 40
Sand	32 - 40	0.30 - 0.60	30 - 150
Gravel	35 - 45	0.35 - 0.80	60 - 300

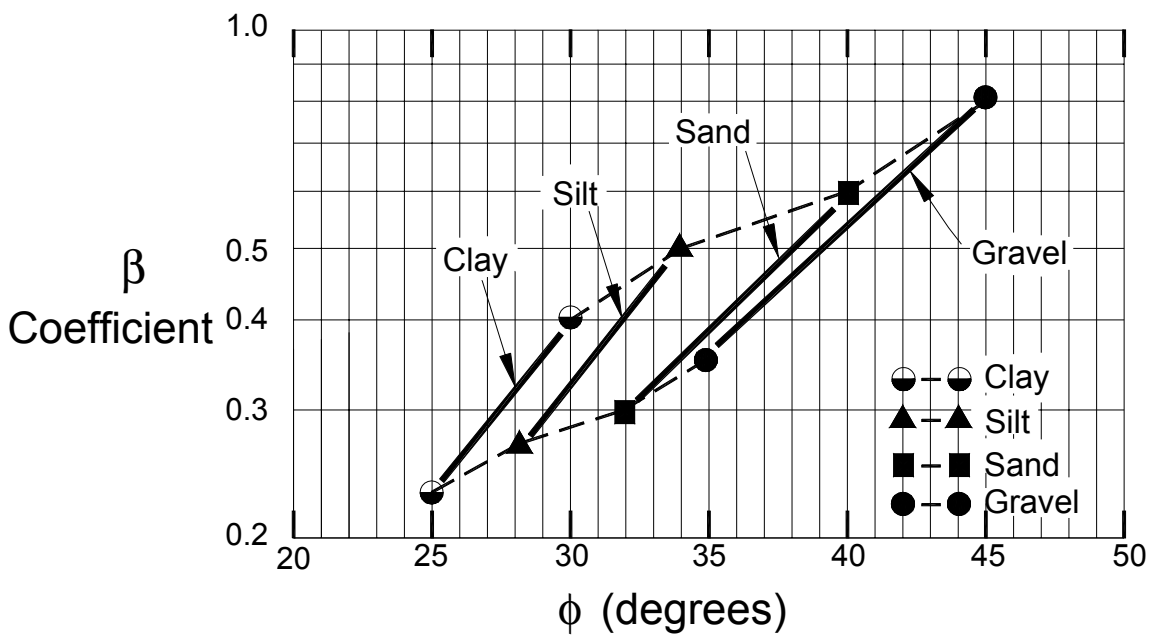

Figure 5-13: Chart for Estimating β Coefficient versus Soil Type ϕ' Angle (after Fellenius, 1991)

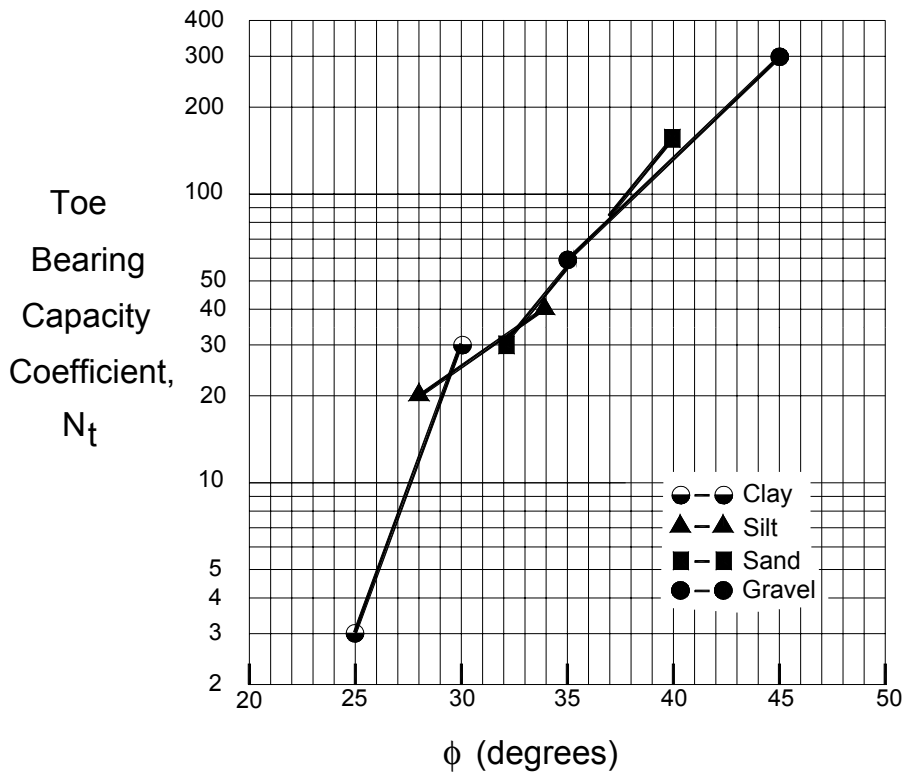

Figure 5-14: Chart for Estimating N_t Coefficient versus Soil Type ϕ' Angle (after Fellenius, 1991)

STEP BY STEP PROCEDURE FOR EFFECTIVE STRESS METHOD (FHWA-HI-97-013)

Step 1 Delineate the soil profile into layers and determine φ' angle for each layer.

A.) Construct the effective overburden versus depth diagram.

B.) Divide the soil profile throughout the pile penetration depth into layers and determine the effective overburden pressure, p_o, at the midpoint of each layer.

C.) Determine the φ' angle for each layer from laboratory or in-situ test data. In the absence of laboratory or in-situ test data for cohesionless soils, determine the average corrected SPT N' value for each layer and estimate φ' angle from Table 5-1.

Step 2 Select the β coefficient for each soil layer.

Use Table 5-2 and Figure 5-13 to estimate β for each layer.

Step 3 For each soil layer, compute the unit shaft resistance, f_s.

$$f_s = \beta \bar{p}_o$$

Step 4 Compute the shaft resistance in each layer of soil and the ultimate shaft resistance, R_s, from the sum of the shaft resistances from each layer.

$R_s = \sum f_s A_s$

where: A_s = pile shaft surface area = (perimeter) x (embedded length)

Step 5 Compute the unit toe resistance, q_t.

$q_t = N_t p_t$

Use local experience or Table 5-2 and Figure 5-14 to estimate N_t.

Step 6 Compute the ultimate toe resistance, R_t.

$R_t = q_t A_t$

Step 7 Compute the ultimate pile capacity (kips)

$Q_u = R_s + R_t$

Step 8 Compute the allowable design load Q_a (kips)

$Q_a = Q_u / \textit{Factor of Safety}$

5.6 NOTTINGHAM AND SCHMERTMANN METHOD (Nottingham and Schmertmann, 1975)

Static cone penetrometer test (CPT) data may be used when available to estimate the static capacity of single piles under axial loads. Nottingham and Schmertmann developed a procedure to estimate static pile capacity from CPT data. That procedure is summarized in the following paragraphs.

The ultimate shaft resistance, R_s, in **cohesionless soils** may be derived from the unit sleeve friction of the CPT using the following equation:

$$R_s = K\left[0.5\left(\overline{fs}A_s\right)_{0to8b} + \left(\overline{fs}A_s\right)_{8btoD}\right] \quad (5\text{-}10)$$

where:
- K = Ratio of unit pile shaft resistance to unit cone sleeve friction from Figure 5-15
- $\overline{fs}$ = Average unit sleeve friction over the depth interval indicated by the subscript (i.e., 0 to 8b)
- A_s = Pile-soil surface area over f_s depth interval
- b = Pile diameter (average in depth interval)
- D = Embedded pile length

If cone sleeve friction data is not available, R_s may be determined from the cone tip resistance in cohesionless soil as follows:

$$R_S = C_f \sum q_c A_S \tag{5-11}$$

where: C_f = 0.018 for timber piles
q_c = Average cone tip resistance along the pile length
A_S = Pile-soil surface area

The shaft resistance in **cohesive soils** is obtained from the sleeve friction values using the following equation:

$$R_S = \alpha' \overline{fs} A_S \tag{5-12}$$

where: α' = Ratio of pile shaft resistance to cone sleeve friction Figure 5-16.

Figure 5-17 is used to determine the ultimate pile toe capacity in cohesive soils using an average weighted cone resistance from 8 pile diameters above the toe to 3.75 pile diameters below the toe. The maximum value of q_t should be limited to 100 ksf, unless local experience warrants use of higher values.

STEP BY STEP PROCEDURE FOR NOTTINGHAM AND SCHMERTMANN METHOD (FHWA-HI-97-013)

Step 1 Delineate the soil profile into layers using the cone tip resistance, q_t, and sleeve friction, $\overline{fs}$, values.

Step 2 Compute the shaft resistance for each soil layer, R_S.

A.) For piles in cohesionless soils, compute ultimate shaft resistance, R_S, using the average sleeve friction value for the layer, $\overline{fs}$, and the K value. The K value should be determined using the full pile penetration depth to diameter ratio from Figure 7-18 and not the penetration depth of the layer. Conversely, the depth d corresponds to the pile toe depth, or the depth to the bottom of the layer, whichever is less.

$$R_s = K\left[0.5\left(\overline{fs} A_s\right)_{0to8b} + \left(\overline{fs} A_s\right)_{8btoD}\right]$$

For cohesionless layers below a depth of 8b, the above equation for shaft resistance in a layer reduces to:

$$R_S = K \overline{fs} A_S$$

For piles in cohesionless soils without sleeve friction data, compute the ultimate shaft resistance from:

$$R_S = C_f \sum q_c A_S$$

B.) For piles in cohesive soils, compute the ultimate shaft resistance using the average sleeve friction value for the layer from:

$$R_S = \alpha' \overline{fs} A_S$$

Use Figure 5-16 to determine α'.

Step 3 Calculate the total pile shaft resistance from the sum of the shaft resistances from each soil layer.

Step 4 Compute the unit pile toe resistance, q_t.

$$q_t = (q_{c1} + q_{c2}) \div 2$$

Use Figure 7-20 to determine q_{c1} and q_{c2}.

Step 5 Determine the ultimate toe resistance, R_t.

$R_t = q_t A_t$

Step 6 Compute the ultimate pile capacity (kips)

$Q_u = R_s + R_t$

Step 7 Compute the allowable design load Q_a (kips)

$Q_a = Q_u / \textit{Factor of Safety}$

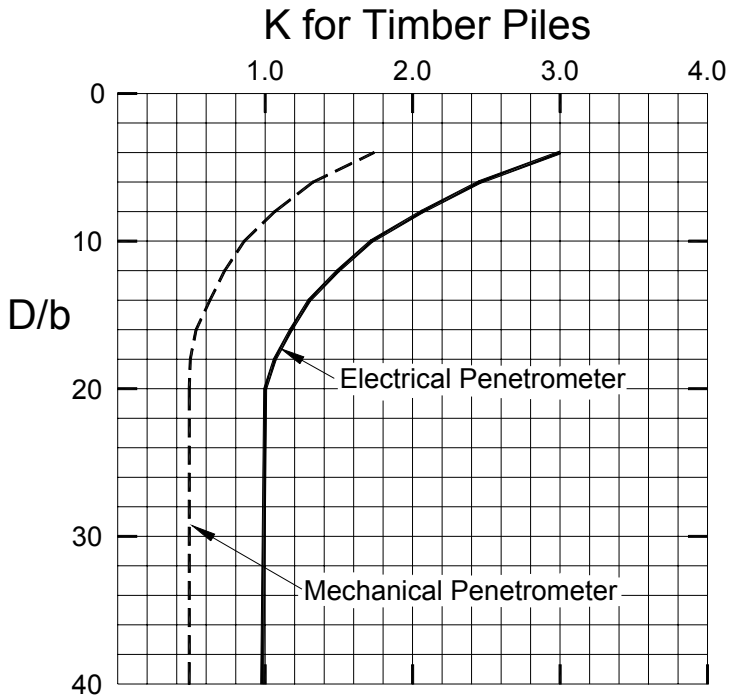

Figure 5-15: Penetrometer design curves for pile side friction in sand (FHWA-TS-78-209)

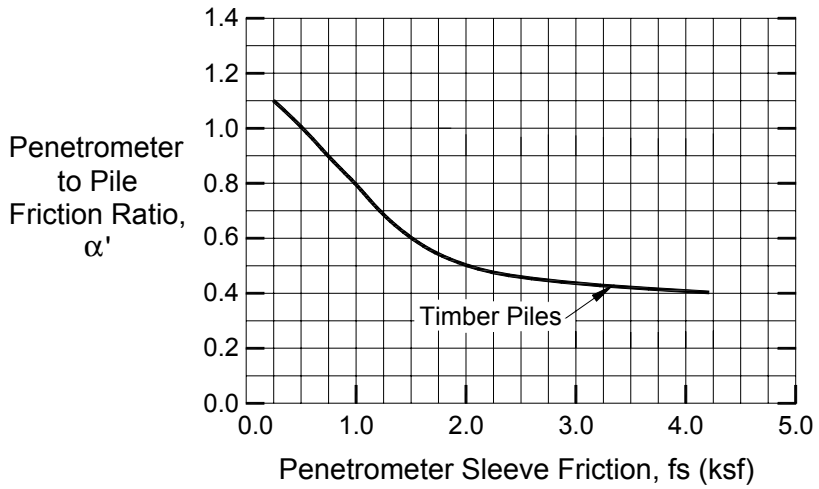

Figure 5-16: Design curve for pile side friction in clay (after Schmertmann, 1978)

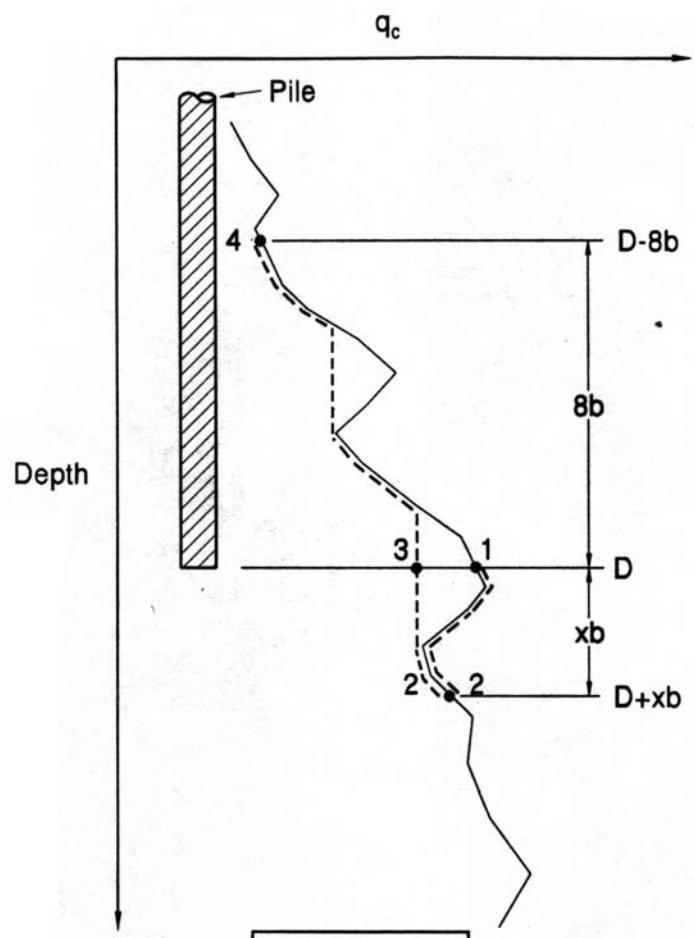

$$q_t = \frac{q_{c1} + q_{c2}}{2}$$

q_{c1} = Average q_c over a distance of xb below the pile toe (path 1-2-3). Sum q_c values in both the downward (path 1-2) and upward (path 2-3) direction. Use actual q_c values along path 1-2 and the minimum path rule along path 2-3. Compute q_{c1} for x-values from 0.7 to 3.75 below the pile toe and use the minimum q_{c1} value obtained.

q_{c2} = Average q_c over a distance of 8b above the pile toe (path 3-4). Use the minimum path rule as for path 2-3 in the q_{c1} computations.

b = Pile width or diameter.

D = Embedded pile length.

Figure 5-17: Illustration of Nottingham and Schmertmann Procedure for Estimating Pile Toe Capacity (FHWA-TS-78-209)

5.7 UPLIFT CAPACITY OF SINGLE PILES

The uplift capacity for timber piles in cohesive soils may be determined by considering the shaft resistance as presented in section 5.3 and adding the weight of the pile to obtain the ultimate uplift capacity. Comparison of uplift pile load tests with compression pile load tests in cohesive soils reveals that the uplift adhesion between the pile and the soil is approximately the same as the adhesion developed in compression. It has been found that negative pore pressures may occur in clays during uplift. The uplift capacity may, therefore, be less than the short-term capacity because the clay tends to soften with time as the negative pore pressure dissipates.

For timber piles in cohesionless soils, the uplift capacity is generally less than the compression capacity of the pile. This lower capacity is a function of the taper of the pile and the skin friction between the pile and soil for uplift loading is less than for compression loading.

FHWA, therefore, recommends that the design uplift capacity of a single pile in cohesionless or cohesive soils should be taken as one third (1/3) of the ultimate shaft resistance calculated from either the Nordlund method, the α method, the effective stress method, or the Nottingham and Schmertmann method. Two uplift connection details that are often used for timber piles are shown on Figure 5-18.

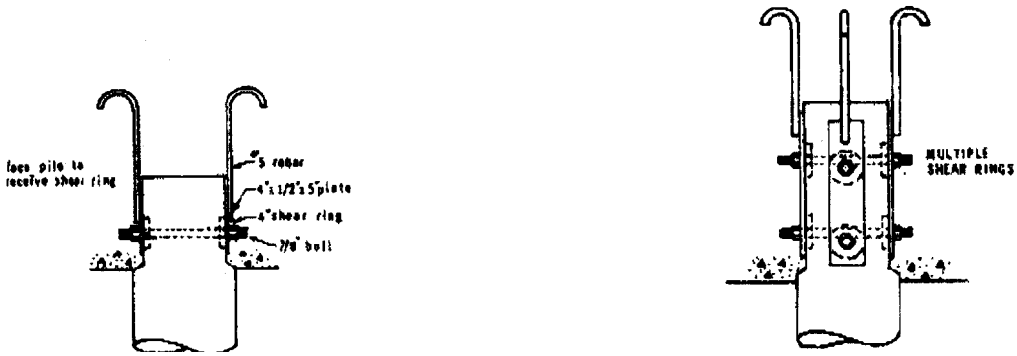

Figure 5-18: Uplift connection details.

CHAPTER 6.0
DESIGN OF PILE GROUPS

6.1 INTRODUCTION

The design of a group of piles must consider the axial load carrying capacity of the pile group as well as the settlement of the pile group. In group pile design it is convenient to refer to the efficiency of a group (η_g) of piles as the ratio of the ultimate capacity of the group to the sum of the ultimate capacity of the individual piles in the group. The group efficiency is expressed as follows:

$$\eta_g = Q_{ug} \div (nQ_u) \tag{6-1}$$

where: Q_{ug} = Ultimate capacity of the pile group
n = Number of piles in the pile group
Q_u = Ultimate capacity of each individual pile in the group

It is recommended that a maximum pile to pile spacing of 3 pile diameters be used for all pile groups.

6.2 AXIAL PILE CAPACITY OF PILE GROUPS IN COHESIONLESS SOILS

For timber piles driven in cohesionless soils with a center-to-center spacing of less than 3 pile diameters, the ultimate capacity of the group is greater than the ultimate capacity of the sum of the individual piles (i.e., $\eta_g > 1$). This is due to the effect of soil compaction between piles; when the piles are spaced this closely together, the compaction effect on the soil is overlapped. Piles at spacings greater than 3 pile diameters act as individual piles.

6.3 AXIAL PILE CAPACITY OF PILE GROUPS IN COHESIVE SOILS

Use the following procedure for the determination of the ultimate capacity of timber pile groups in cohesive soils. The lesser of the four calculated ultimate group capacities using the following four steps should be used (FHWA-HI-97-013).

1.) For pile groups driven in clays with undrained shear strengths less than 2 ksf and the pile cap **not** in firm contact with the ground, use a group efficiency of 0.7. If the center-to-center spacing is greater than 6 pile diameters, then a group efficiency of 1.0 may be used.

2.) For piles in clays with an undrained shear strength less than 2 ksf and the pile cap in firm contact with the ground, use a group efficiency of 1.0.

3.) For pile groups in clays with undrained shear strength greater than 2 ksf, use a group efficiency of 1.0.

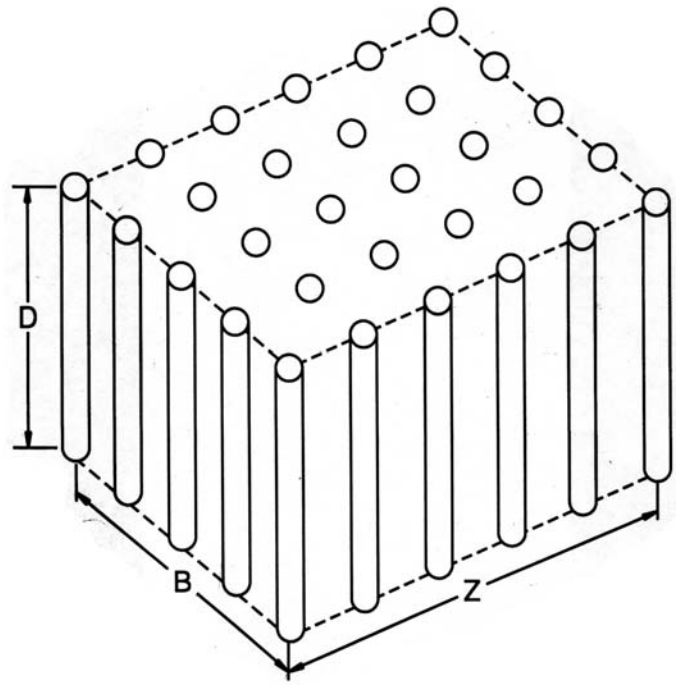

Figure 6-1: Three Dimensional Pile Group Configuration (after Tomlinson, 1994)

4.) Calculate the ultimate pile group capacity against block failure.

Block failure is generally only a concern for pile groups in soft cohesive soils. The ultimate capacity of a pile group against block failure (Figure 6-1) is determined from the following equation:

$$Q_{ug} = 2D\left(B + Z\right)c_{u1} + B\,Z\,c_{u2}\,N_c \qquad (6\text{-}2)$$

where:

- D = Embedment length of piles
- B = Width of pile group
- Z = Length of pile group
- c_{u1} = Weighted average of the undrained shear strength over the depth of the pile embedded in the cohesive soil along the pile group perimeter
- c_{u2} = Average of the undrained shear strength of the cohesive soil at the base of the pile group to a depth of 2B below the pile toe
- N_c = Bearing capacity factor (for rectangular pile groups)

The bearing capacity factor, N_c, for a rectangular pile group is generally 9. However, for pile groups with small pile embedment depths and/or large widths, N_c, should be calculated from the following equation.

$$N_c = 5\,[1 + D/5B][1 + B/5Z] \leq 9 \qquad (6\text{-}3)$$

Pile driving in cohesive soils may generate large excess pore water pressures, which may result in short-term (i.e., 1 to 2 months after installation) group efficiencies on the order of 0.4 to 0.8. As the excess pore water dissipates the group efficiency will increase.

6.4 SETTLEMENT OF PILE GROUPS IN COHEHSIONLESS SOILS

For pile groups in cohesionless soils, settlements will be immediate as the pile group is loaded. This is due to the high permeability of the soil. The settlement (*s*) of a pile group in homogeneous sand deposits not underlain by a more compressible soil at greater depth may be estimated using Meyerhof's (1976) approach which is based on SPT N', values and is shown below :

$$s = \left(p_f \sqrt{B} I_f\right) \div \overline{N}' \qquad \text{(6-4a)}$$

For silty sands:

$$s = \left(2 p_f \sqrt{B} I_f\right) \div \overline{N}' \qquad \text{(6-4b)}$$

where:
- s = Settlement in inches
- p_f = Design foundation pressure (ksf)
- B = Width of pile group (ft)
- N' = Average corrected SPT N' value within a depth B below pile toe
- D = Pile embedment depth (ft)
- I_f = Influence factor for group embedment = 1 – [D/8B] ≥ 0.5

For use of CPT data see FHWA-HI-97-013. For piles in cohesionless soils underlain by cohesive soils the method presented in the following section should be used.

6.5 SETTLEMENT OF PILE GROUPS IN COHEHSIVE SOILS

The settlement of pile groups in cohesive soils may be modeled as an equivalent footing at a depth below the pile toe as shown in Figure 6-2. Using this figure the settlement of the pile group may be determined using classical consolidation theory.

The settlement of a foundation resting on layers of normally consolidated soils ($\sigma'_p = \sigma'_{vo}$) can be computed from:

$$S_c = \sum_i^n \frac{C_c}{1 + e_o} H_o \log_{10} \frac{\sigma'_{vf}}{\sigma'_{vo}} \qquad \text{(6-5)}$$

where:
- C_c = Compression index of the normally consolidated portion of the void ratio versus log σ'_v curve
- e_o = Iinitial void ratio
- H_o = Layer thickness
- σ'_{vo} = Initial effective vertical stress at the center of layer n
- σ'_{vf} = Final effective vertical stress at the center of layer n.

The final effective vertical stress is computed by adding the stress change due to the foundation load to the initial vertical effective stress. The total settlement will be the sum of the compression of the n layers of soil.

Normally the slope of the virgin portion of the e-log σ'_v curve is determined from the corrected one-dimensional consolidation curve measured on specimens taken from each relevant soil in

the stratigraphic column. A detailed discussion on consolidation settlement analysis is beyond the scope of this manual.

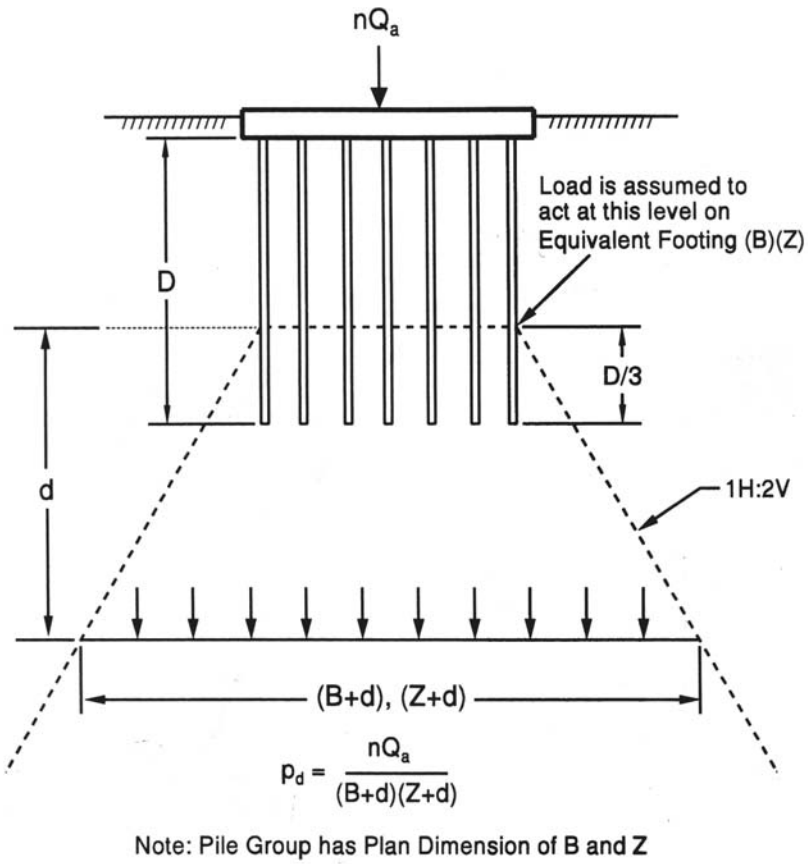

Figure 6-2: Equivalent Footing Concept (FHWA-HI-97-013)

CHAPTER 7.0
MARINE APPLICATION DESIGN CONSIDERATIONS

7.1 INTRODUCTION

Timber piles have been used extensively to support piers and wharfs because of their excellent performance characteristics in both fresh and salt water and their ability to withstand lateral loads without structural failure. This chapter will present details on the design of laterally loaded piles.

The design of lateral loaded piles must evaluate both the structural capacity of the pile and the soil deformation with respect to these lateral loads. The design of laterally loaded piles follows one of two approaches 1.) lateral load tests, or 2.) analytical methods.

Lateral load tests conducted at the site will give a direct measure of the lateral capacity of timber piles. This may be a relatively costly procedure that is not warranted on many projects. Analytical methods are available that permit rational consideration of the site parameters. Two common approaches are Broms' hand calculation method and Reese's (1984) computer solution (COM624P). Broms' method is a simple method to determine the lateral load and pile deflection at the ground surface, ignoring axial load in the pile. On small projects or non-critical projects, the Broms' method may be used. However, when there are definite limits on allowable pile movements, a more detailed load-deformation analysis technique should be used (i.e., COM624P). This chapter will present the Broms' method. For a detailed discussion of the Reese method (COM624P) see FHWA-IP-84-11. COM624P is available from FHWA.

7.2 BROMS' METHOD

The Broms' method calculates the ultimate soil resistance to lateral load as well as the maximum moment induced in the pile as a result of the lateral load. This method may be used to evaluate lateral capacity for both fixed and free pile head conditions in either purely cohesive or purely cohesionless soil profiles. For mixed soil profiles COM624 is recommended. For long fixed head piles in cohesionless soil, the Broms' method may over-predict lateral load capacity. Com624 may be used for this condition.

STEP BY STEP PROCEDURE FOR BROMS' METHOD FOR LATERALLY LOADED PILES (FHWA-HI-97-013)

Step 1 Determine the general soil type (i.e., cohesive or cohesionless) within the critical depth below the ground surface (approximately 4 to 5 pile diameters).

Step 2 Determine the coefficient of horizontal subgrade reaction, K_h, within the critical depth for cohesive or cohesionless soils.

Cohesive soils: $K_h = (n_1\ n_2\ 1670\ q_u)/b$ (7-1)

Where: q_u = Unconfined compressive strength in (psf)
b = Diameter of the pile (ft)
n_1 = Empirical coefficient taken from table 7-1.
n_2 = Empirical coefficient for timber = 1.30

Table 7-1
Coefficient n_1 for Cohesive Soils

Unconfined Compressive Strength (ksf)	n_1
Less than 1	0.32
1 to 4	0.36
More than 4	0.40

Cohesionless Soils: Choose K_h from table 7-2.

Table 7-2
Values of K_h for Cohesionless Soils

Soil Density	K_h (kcf)	
	Above Groundwater	Below Groundwater
Loose	12	7
Medium	52	35
Dense	112	69

Step 3 Adjust K_h for loading and soil conditions.

Cyclic Loading (Earthquake Loading) in Cohesionless Soil:

1. K_h = 0.50 K_h from step 2 for medium to dense soil.

2. K_h = 0.25 K_h from step 2 for loose soil.

Static loads resulting in soil creep (cohesive soil):

1. K_h = (0.16 to 0.33) K_h from step 2 for soft to very soft normally consolidated clay.
2. K_h = (0.25 to 0.50) K_h from step 2 for stiff to very stiff clay.

Step 4 Determine Pile Parameters:

- Modulus of elasticity (E)
- Moment of inertia (I)
- Section Modulus (S)
- Allowable bending stress of timber pile (F_b)
- Diameter of pile (b)
- Eccentricity of applied load e_c for free-headed piles (I.e., vertical distance between ground surface and lateral load)
- Resisting moment of the pile $M_y = S\ F_b$

Step 5 Determine β_h for cohesive soils or η for cohesionless soils.

$\beta_h = (K_h b/4EI)^{1/4}$ for cohesive soil

$\eta = (K_h/EI)^{1/5}$ for cohesionless soil

Step 6 Determine the dimensionless length factor.

$\beta_h D$ for cohesive soils

ηD for cohesionless soils

Step 7 Determine if the pile is long or short.

Cohesive soil:

1. $\beta_h D > 2.25$ (long pile)
2. $\beta_h D < 2.25$ (short pile)

It is suggested that for $\beta_h D$ values between 2.0 and 2.5 both long and short pile criteria should be considered in step 9. The smaller value should be used.

Cohesionless soil:

1. $\eta D > 4.0$ (long pile)
2. $\eta D < 2.0$ (short pile)
3. $2.0 < \eta D < 4.0$ (intermediate pile)

Step 8 Determine the other required soil parameters over the embedded length of the pile.

a.) The Rankine passive earth pressure coefficient for cohesionless soil K_p.

$$K_p = \tan^2 (45 + \phi /2)$$

b.) The average effective unit weight of the soil γ'

c.) The undrained cohesion c_u of the soil (c_u=0.5 q_u)

Step 9 Determine the ultimate lateral load for a single pile Q_u.

a.) Short Free or Fixed Headed Pile in cohesive soil – using D/b (and e_c/b for free headed case) enter Figure 7-1 and select the corresponding value of $Q_u/c_u b^2$ and solve for Q_u.

b.) Long Free or Fixed Headed Pile in cohesive soil – using $M_y/c_u b^3$ (and e_c/b for free headed case) enter Figure 7-2 and select the corresponding value of $Q_u/c_u b^2$ and solve for Q_u.

c.) Short Free or Fixed Headed Pile in cohesionless soil – using D/b (and e_c/D for free headed case) enter Figure 7-3 and select the corresponding value of $Q_u/K_p b^3\gamma$ and solve for Q_u.

d.) Long Free or Fixed Headed Pile in cohesionless soil - using $M_y/\gamma b^4 K_p$ (and e_c/b for free headed case) enter Figure 7-4 and select the corresponding value of $Q_u/K_p b^3\gamma$ and solve for Q_u.

e.) Intermediate Free or Fixed Headed Pile in cohesionless soil – calculate Q_u for both short and long pile and use the smaller value.

Step 10 Calculate the maximum allowable working load for a single pile Q_m.

$$Q_m = Q_u/2.5$$

Step 11 Calculate the working load for a single pile Q_a.

Calculate Q_a corresponding to a given design deflection at the ground surface (y) or the deflection corresponding to a given design load. If Q_a and y are not given, substitute the value of Q_m from step 10 for Q_a in the following cases and solve.

a.) Free or Fixed Headed Pile in cohesive soil – using $\beta_h D$ (and e_c/D for free headed case) enter Figure 7-5 and select the corresponding value of $yK_h bD/Q_a$ and solve for Q_a or y.

b.) Free or Fixed Headed Pile in cohesionless soil – using ηD (and e_c/D for free headed case) enter Figure 7-6 and select the corresponding value of $y(EI)^{3/5}K_h^{2/5}/Q_a D$ and solve for Q_a or y.

Step 12 Compare Q_a to Q_m.

If $Q_a > Q_m$ use Q_m and calculate y_m.

If $Q_a < Q_m$ use Q_a and y.

If Q_a and y are not given use Q_m and y_m.

Step 13 Reduce the allowable load from step 12 for pile group effects and the method of pile installation.

a.) Group reduction factor determined by the center to center pile spacing (z) in the direction of load.

z	Reduction Factor
8b	1.0
6b	0.8
4b	0.5
3b	0.4

b.) Method of installation reduction factor.
1.) For driven piles use no reduction

2.) For jetted piles use 0.75 of the value from step 13a.

Step 14 Determine pile group lateral capacity.

The total lateral capacity of the pile group equals the adjusted allowable load per pile from step 13b times the number of piles. The deflection of the pile group is the value selected in step 12. It should be noted that no provision has been made to include the lateral resistance offered by the soil surrounding an embedded pile cap.

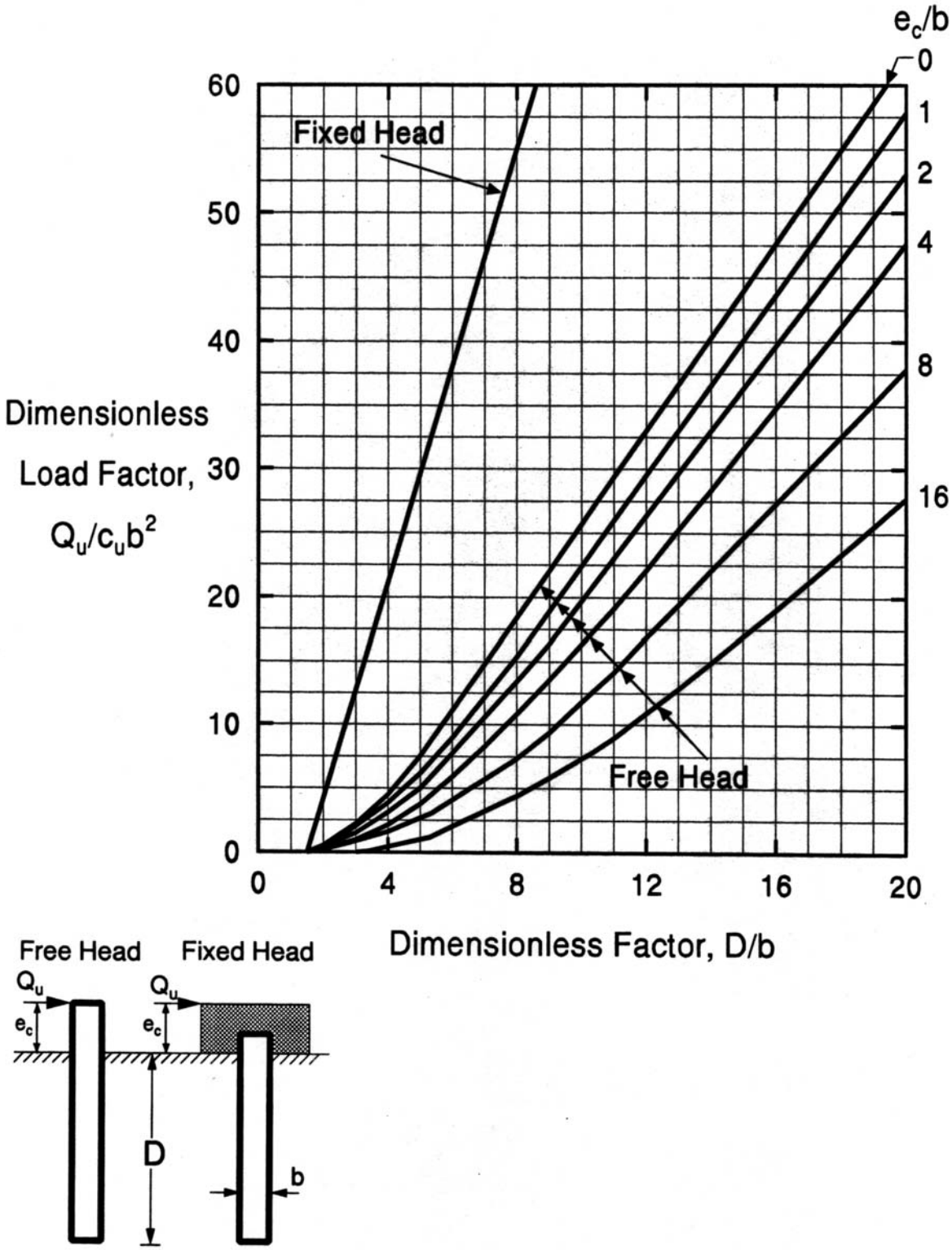

Figure 7-1: Ultimate lateral load capacity of short piles in cohesive soils (FHWA-HI-97-013)

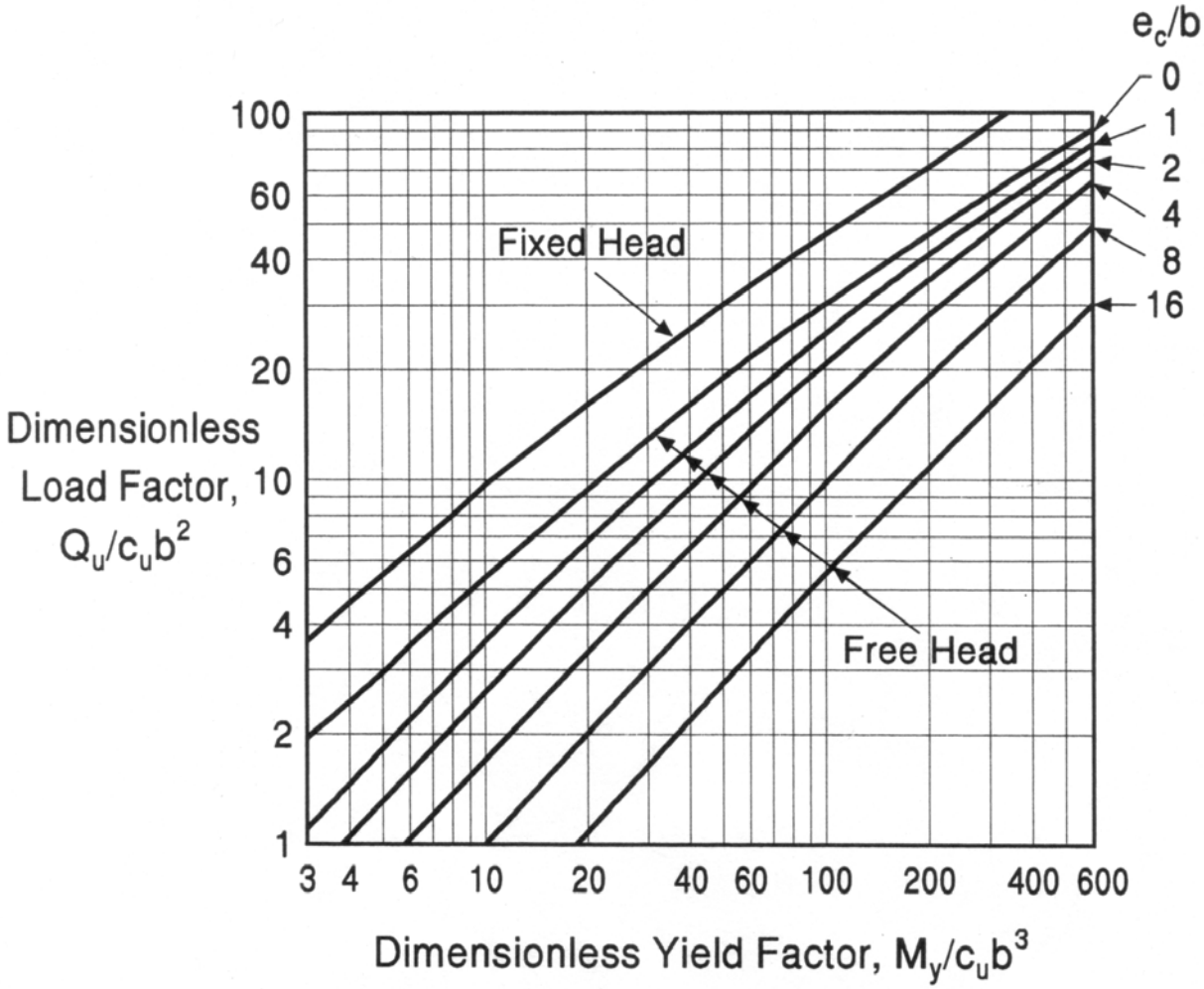

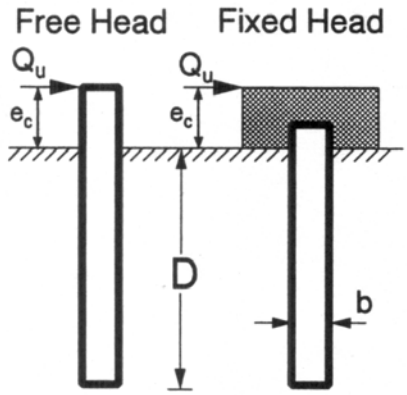

Figure 7-2: Ultimate lateral load capacity of long piles in cohesive soils (FHWA-HI-97-013)

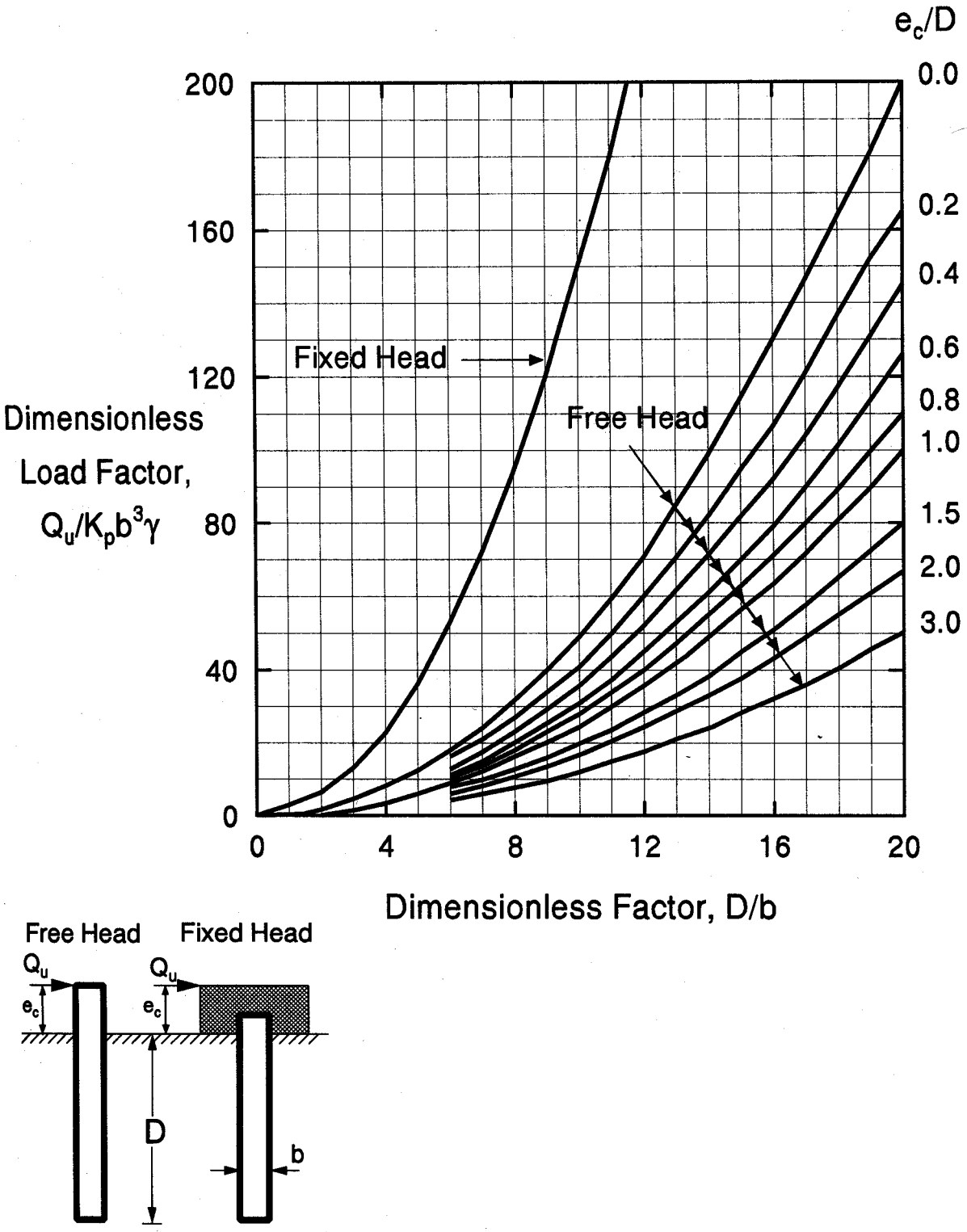

Figure 7-3: Ultimate lateral load capacity of short piles in cohesionless soils (FHWA-HI-97-013)

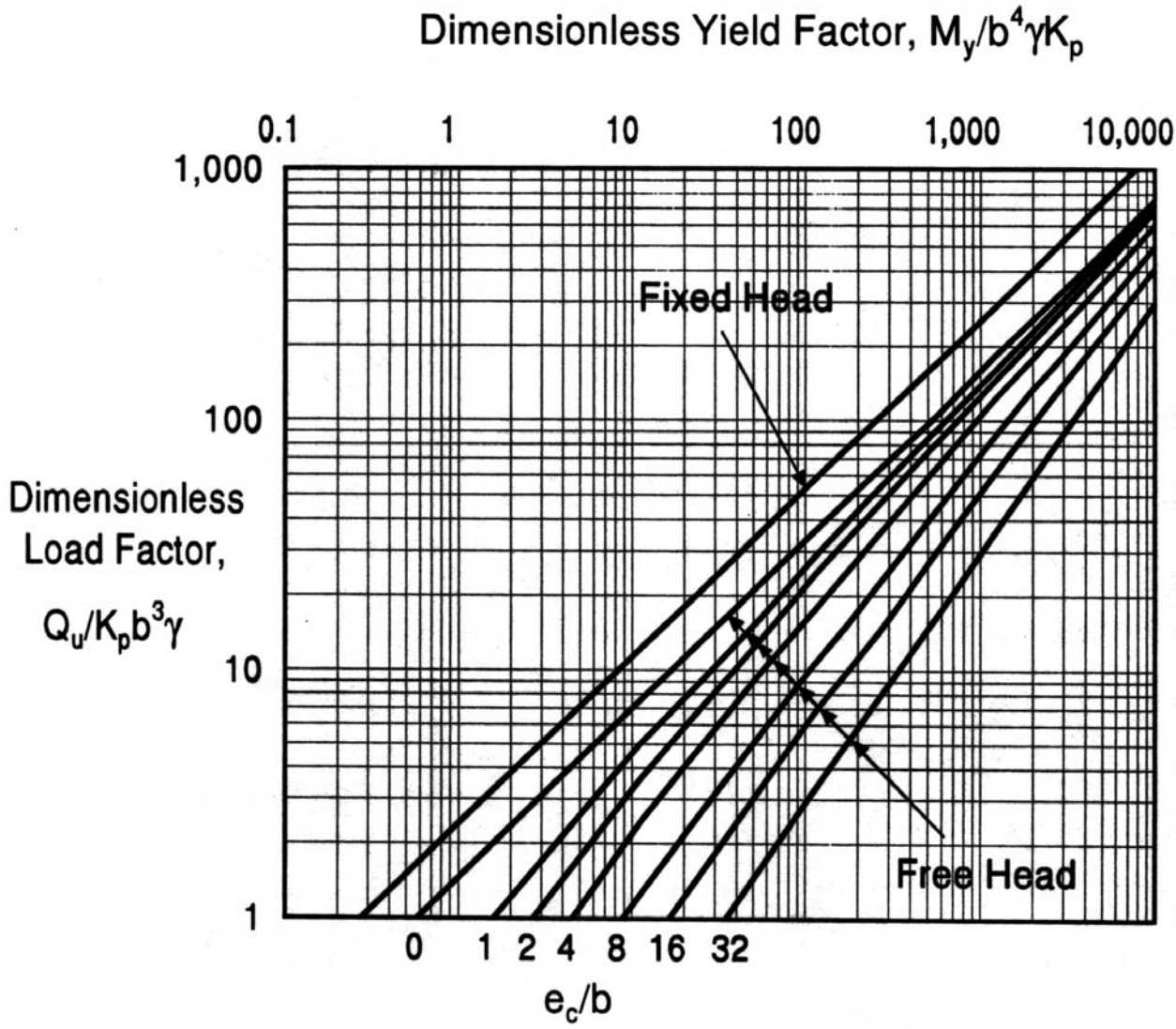

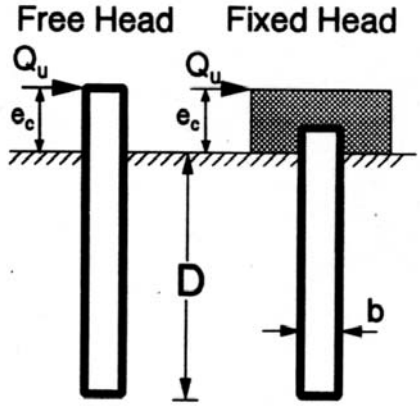

Figure 7-4: Ultimate lateral load capacity of long piles in cohesionless soils (FHWA-HI-97-013)

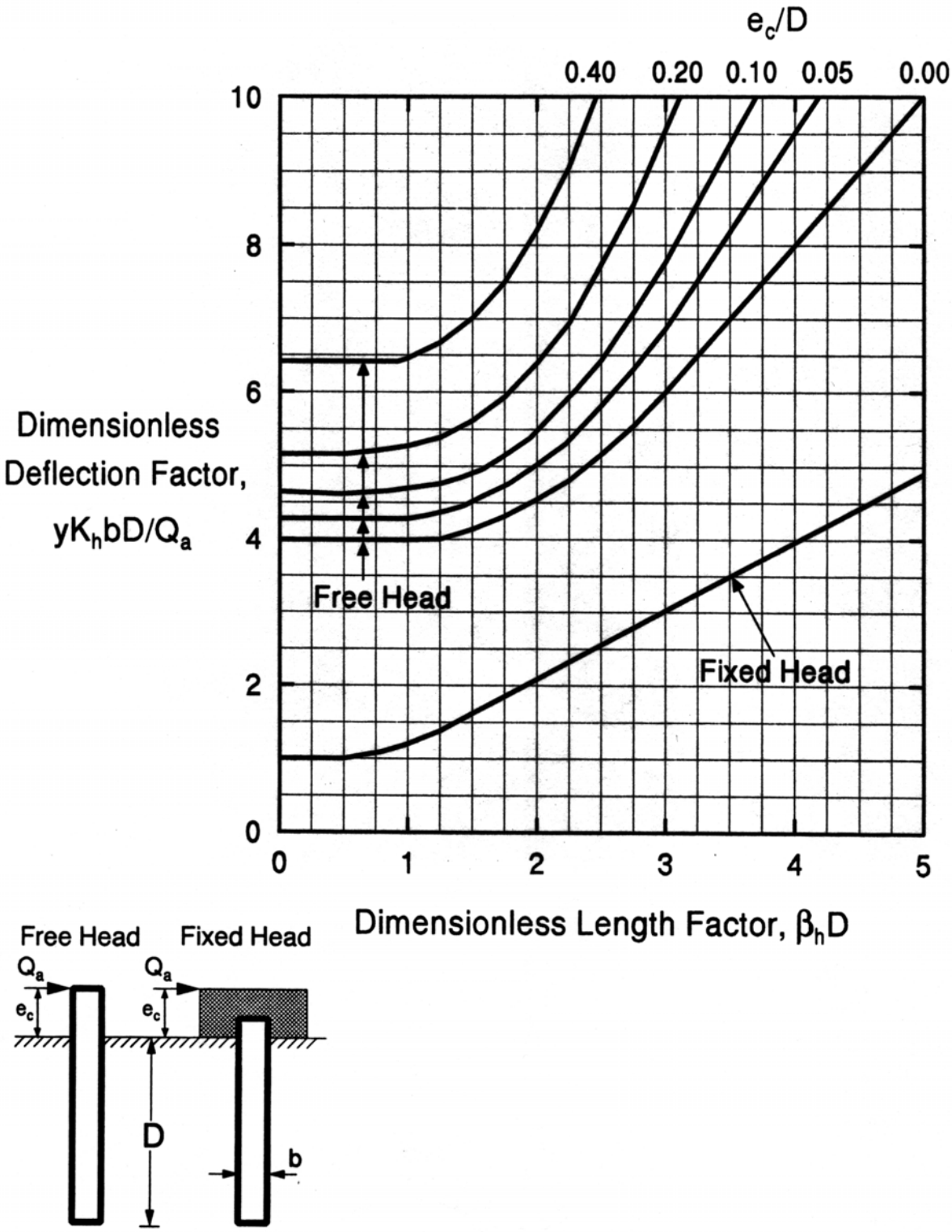

Figure 7-5: Lateral deflection at ground surface of piles in cohesive soils (FHWA-HI-97-013)

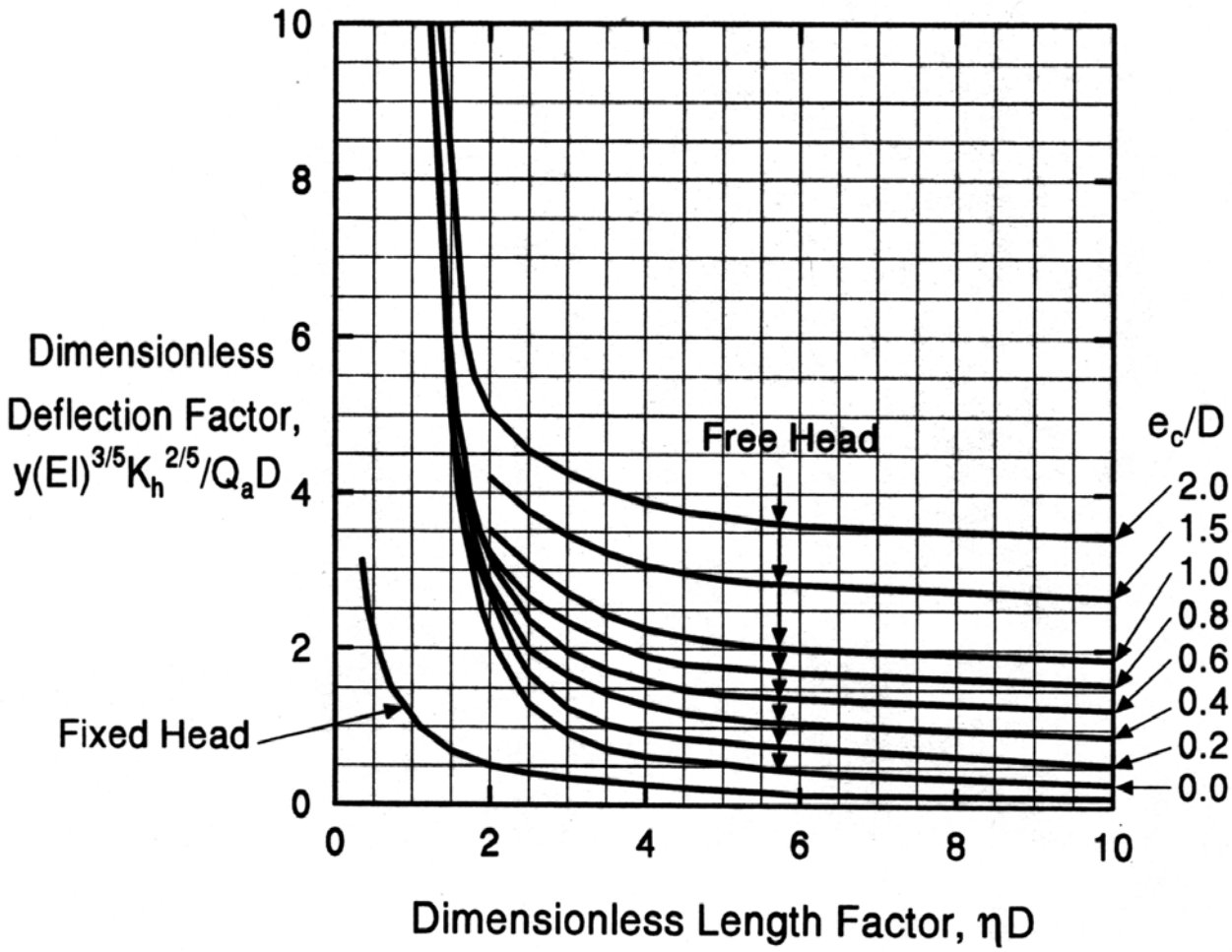

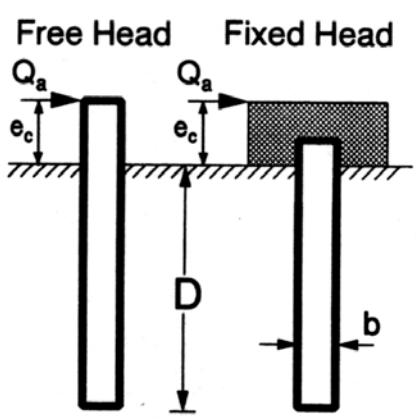

Figure 7-6: Lateral deflection at ground surface of piles in cohesionless soils (FHWA-HI-97-013)

CHAPTER 8.0
PILE INSTALLATION

8.1 INTRODUCTION

The installation of timber piles is a process that involves dropping a weight on top of the pile in order to drive the pile into the ground. Timber piles have been used for centuries to support man-made structures. The installation process has not changed much over the years. The equipment that is used to install timber piles includes a crane, a boom, a set of leads, a hammer, a helmet, a pile gate, pile monkey, and pile (Figure 8-1). This chapter will briefly discuss the equipment used to install timber piles, preliminary selection of hammer size, pile accessories which facilitate the installation while minimizing damage from the installation process, and treatment of pile butts after cutoff. This chapter will only briefly touch on these items as they pertain to the installation of timber piles.

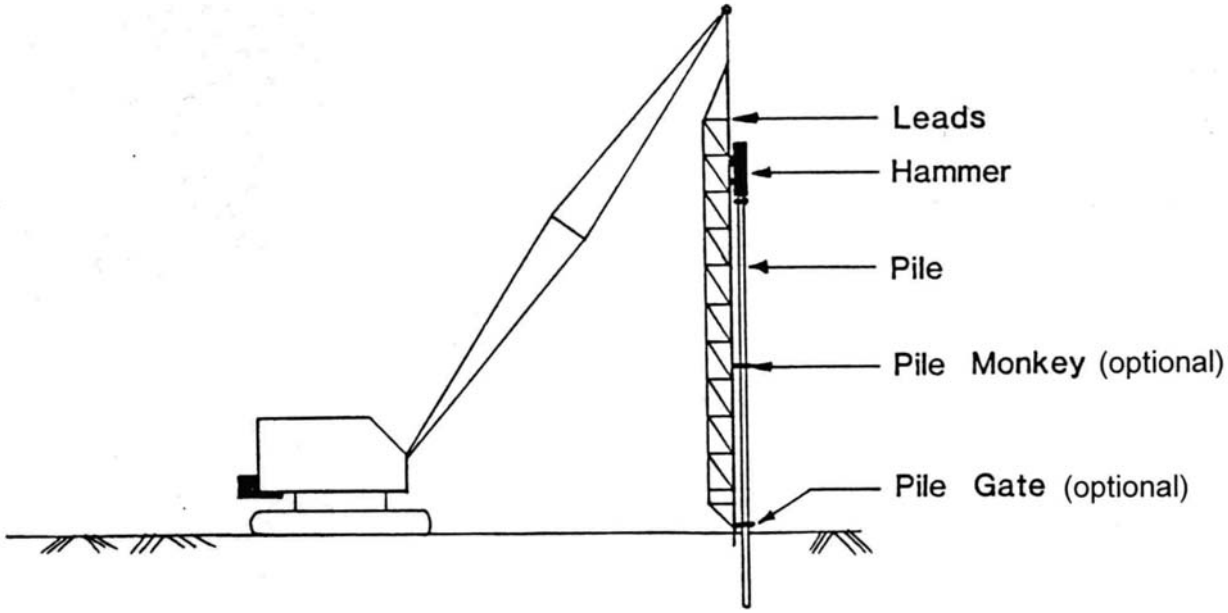

Figure 8-1: Swinging Leads

8.2 PILE DRIVING EQUIPMENT

The equipment necessary to install timber piles includes a crane that is capable of handling the loads from the pile driving equipment with sufficient capacity so that the reach of the crane does not limit the productivity of the installation process. The boom on the crane must be long enough to allow the maximum length pile to be installed without severely limiting the reach of the crane. The crane may be either a truck mounted or a crawler mounted rig. The selection of truck versus crawler will depend of the site conditions, maximum loads anticipated, and availability. The selection of the most economical crane for a project is typically left to the contractor.

8.2.1 Leads

There are predominantly two types of leads used for the installation of timber piles: swinging leads and fixed leads. The function of the leads is to maintain alignment of the hammer-pile system so that a concentric blow is delivered to the pile from the hammer for each impact. Swinging leads are the most commonly used leads because of their simplicity and economy. Figure 8-1 shows a typical swinging lead arrangement. The leads and hammer are usually held by separate lines from the crane. The name swinging leads comes from the leads ability to rotate freely so that the hammer and pile may be aligned without precisely aligning the crane with the pile butt (head). Swinging leads are typically lighter in weight than fixed leads and therefore allow for a larger crane radius than when using fixed leads. Thus, the contractor may install more piles from the same setup.

Fixed leads have a pivot point at the crane's boom top and are braced between the crane and lead, at the bottom of the leads (Figure 8-2). Fixed leads offer good control of the pile alignment. This control does not come without cost. Fixed leads are typically more expensive than swinging leads. The production rate may also be slower when using fixed leads as opposed to swinging leads. Regardless of the type of lead chosen for a project, the leads should keep the pile in good alignment with the hammer so that eccentric impacts which may cause local stress concentrations and pile damage are minimized.

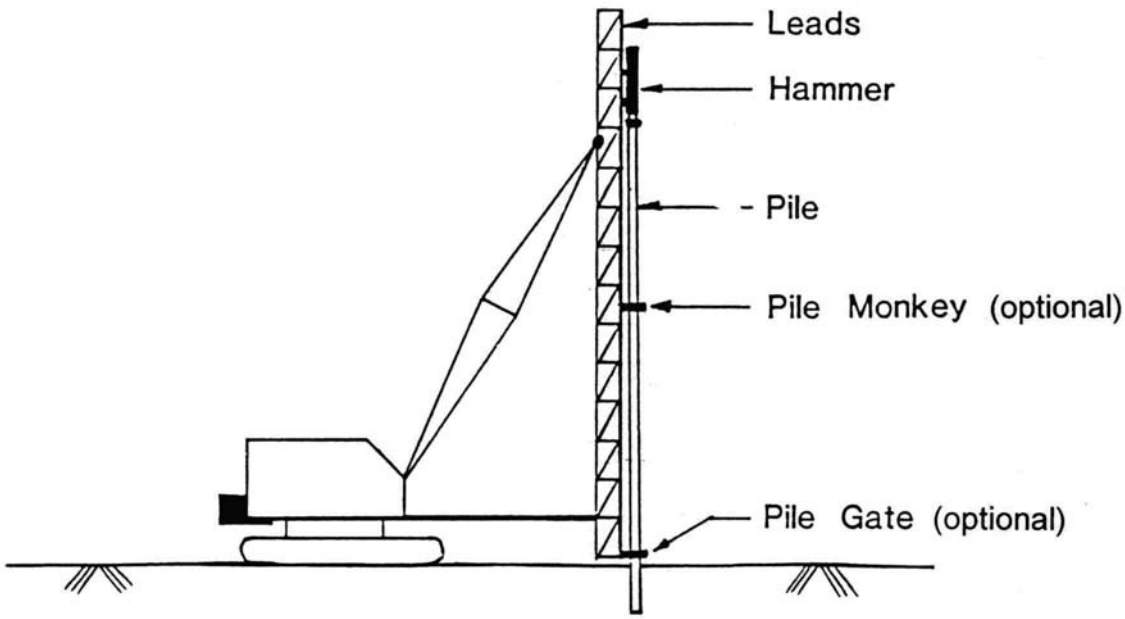

Figure 8-2: Fixed leads

8.2.2. Pile Hammers

There are two general categories of pile hammers; vibratory and impact hammers. Vibratory hammers use counter rotating weights to impart a sinusoidal vibrating axial force to the pile. Vibratory hammers are typically used for non-displacement piles. It has been found difficult to install displacement piles, using vibratory hammers, due to the

difficulty in displacing the soil laterally at the pile toe with vibrations. Vibratory hammers are, therefore, typically not used to install timber piles.

Impact hammers may be categorized as either external combustion hammers (i.e., steam, air, or hydraulic) or internal combustion (i.e., diesel hammers). External combustion hammers use cables, steam, compressed air or pressurized hydraulic fluid to raise the ram. Figure 8-3 shows the typical components of an external combustion hammer. The energy delivered to the pile when using a drop hammer (a type of external combustion hammer) is very dependent on the operator. Internal powered hammers use diesel combustion inside the hammer to move the ram.

Another way to categorize hammers is single or double acting. Single acting hammers are essentially gravity or drop hammers. Double acting diesel hammers work very similarly to the single acting diesel hammer. The main difference between the single and double acting hammer is that the top of the double acting hammer is closed. When the ram moves upward, inside the hammer, the air in the chamber is compressed, which causes a shorter stroke, and therefore a higher blow rate. Double acting hammers, because of this faster blow count are typically more efficient than single acting hammers. For a more detailed discussion of pile hammers see FHWA-RD-86-160 *"The Performance of Pile Driving Systems: Inspection Manual".*

8.2.3 Helmet

The helmet is a heavy steel block between the hammer and the pile. A schematic of a helmet is shown in Figure 8-4. The helmet should provide a smooth surface for contact between the hammer and the pile. The helmet should fit snugly over the pile (less than 2 inches of lateral movement). The top of the helmet is typically recessed for a hammer cushion. The hammer cushion is used to relieve the impact shock between the ram and the pile. Cushion materials eventually become compressed, lose their effectiveness, and must be replaced. Hammer cushion materials are usually proprietary man-made materials. Pile cushions, cushions between the pile butt and helmet are typically not required for timber piles, but are typically used for steel and concrete piles.

8.3 HAMMER SIZE SELECTION

The selection of the hammer size for a project is an important consideration that will affect not only the performance of the pile but the efficiency with which the piles are installed. A hammer that is too small may not be able to install the pile to the required depth, capacity, or may require an excessive number of blow counts. A hammer that is too large may damage the pile. A wave equation analysis which considers the hammer cushion pile soil system may be used to determine the optimal hammer size.

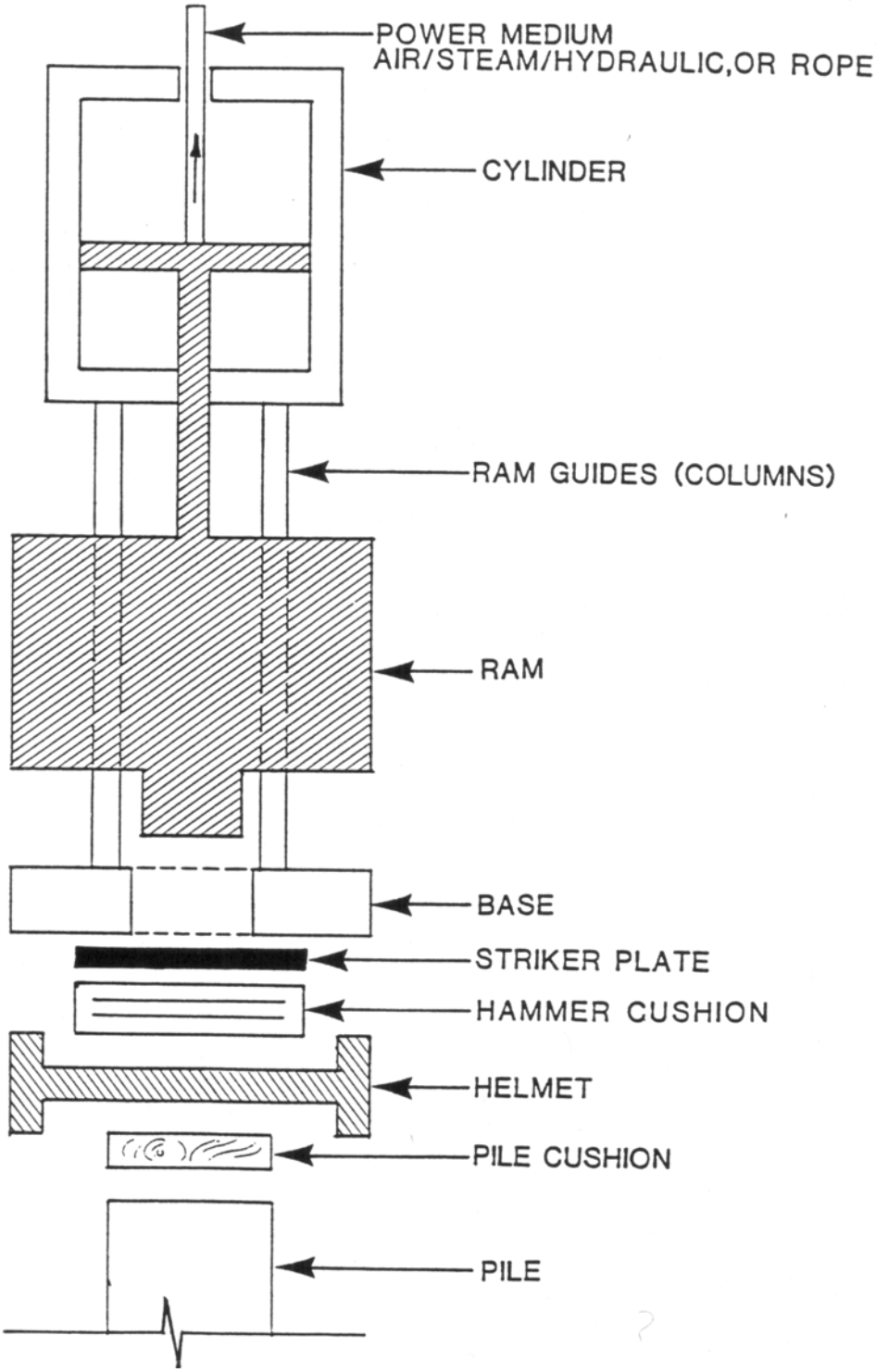

Figure 8-3: Basic components of an external combustion hammer

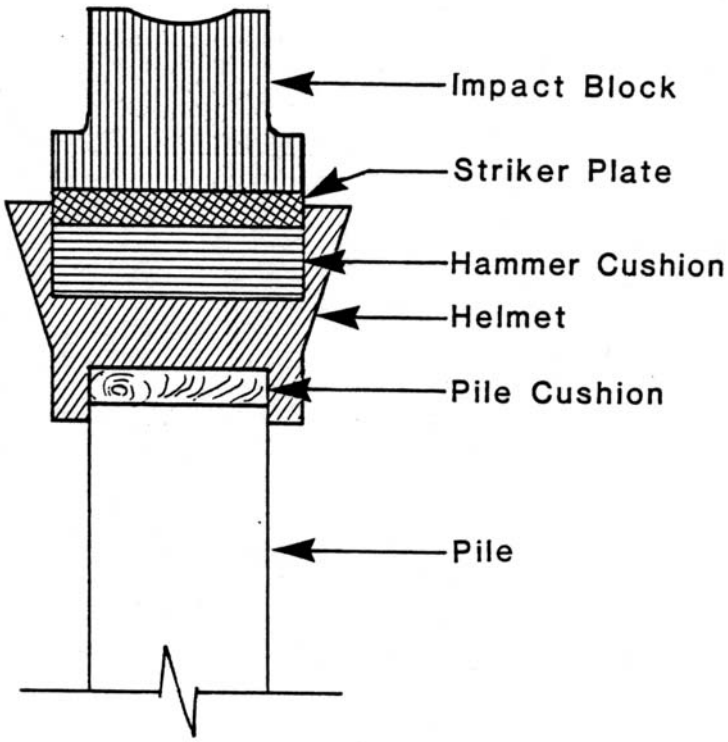

Figure 8-4: Helmet and adjoining parts

8.4 PILE ACCESSORIES

Difficult driving of timber piles through dense soils may cause splitting or brooming of the pile tip. In difficult driving conditions plywood or steel plates fastened to the pile can aid driving. Metal boots or points may be added to the pile tip to reduce the potential for damaging during driving. Boots typically fit over the pile tip without any required trimming of the pile. Pile points, on the other hand, typically require trimming of the pile tip. Both systems have proven effective in reducing the damage to the pile tip during driving in difficult ground.

8.5 PILE CUTOFFS

One advantage of timber piles is that after installation, the pile butt may be easily cut off to the correct elevation, typically with a chain saw. The cutoff surface should be treated with creosote or CuNp (copper naphthenate), in accordance with AWPI Standard M-4, to protect the end of the pile from organic degradation.

CHAPTER 9.0
PILE LOAD TESTING

9.1 INTRODUCTION

Pile load testing is an important tool for design engineers to verify that assumptions made in the design of the deep foundation are appropriate for the site. Pile load testing may be conducted prior to the final design of the deep foundation system in order to provide the designer with the design properties to be used for the final design of the pile foundation. Load tests for timber pile foundations are routinely used to prove the adequacy of the soil-pile system for the proposed pile design load.

Static load tests are conducted to measure the response of piles under applied load. Conventional static load test types include axial compression, axial tension and lateral load testing. The cost and engineering time associated with a load testing program should be justified by a thorough foundation investigation and engineering analysis of pile capacity. A thorough timber pile foundation design requires detailed subsurface exploration, appropriate soil testing, subsurface profile development, and static pile analysis. This manual will cover the axial compression load test only. For information on the axial tension or lateral load test refer to Federal Highway Administration *"Static Testing of Deep Foundations"* (FHWA-SA-91-042).

9.2 AXIAL COMPRESSION STATIC LOAD TEST

The location of load tests should be selected by the geotechnical engineer responsible for the pile design where the subsurface conditions have been established directly by SPT or CPT testing. The number of load tests to be performed should also be determined by the geotechnical engineer. The number of load tests will depend on the variability of subsurface conditions throughout the site, and the pile loading.

The magnitude to which the test piles are loaded has in the past been limited to twice the design load. This does not permit a determination of the pile/soil capacity and negates design knowledge obtained from a load test that may otherwise be used to reduce the number or the length of production piles. Load testing to failure is recommended. This will disclose the real safety factor inherent in the design and will provide the geotechnical engineer with the necessary information to economize the design.

The test pile should be the same as the production piles (e.g., same proposed length toe and butt diameters, same pressure treatment, etc.). The test pile should be installed with the same equipment and procedures as is proposed for the production piles. Complete driving records should be maintained during the installation of the piles.

Procedures for conducting axial compression tests are provided in ASTM D 1143 *Standard test Method for Piles Under Axial Compression Load.* Three procedures are provided in this test standard; maintained load test, quick test, and constant rate of penetration test. The quick test is recommended for timber pile projects. This test is conducted to pile failure, or 300% of the design load; the load increments are 10 – 15% of the design load; the duration of each load

increment is 2.5 minutes; and the test duration is 2-3 hours. The advantages of this test procedure are that:

- A load test may be performed in a matter of hours versus 1 – 2 days, typical of the maintained load test.
- Load testing becomes feasible for small projects.
- Test results are more nearly “undrained” conditions of shear failure.

The maintained load test, quick test, and constant rate of penetration test should all be regarded as tests of short duration which may not reflect long-term pile settlements of either individual or group piles. Any attempt to determine the long-term settlements by means of a load test would be uneconomical because of the excessive amount of time that would be required. When the time dependent or drained condition (i.e., creep) performance is desired, the test duration would have to be measured in weeks, months or even years (Fellenius, 1980).

9.2.1 Interpretation of Load Test

The load displacement curve generated from the pile load test is used to determine the allowable pile capacity. The allowable capacity of a pile was defined in chapter 5 as the ultimate capacity of the pile divided by a factor of safety. In order to determine the actual factor of safety for the installed pile, a definition of what constitutes a failure must be established. Piles founded in cohesionless soils seldom experience a plunging failure. Therefore, it is important to define failure, so that engineers are in agreement on what is failure and what factor of safety a design has. The following methods have been used to define failure:

Offset Limit Method (Davisson 1972)**:** The failure load is defined as the load corresponding to a movement which exceeds the elastic compression of the pile, when considered as a free column, by a value of 0.15 inches plus a factor depending on the diameter of the pile (D/120), where D is the diameter of the pile in inches. AASHTO (1992) and FHWA recommend that the offset method be used to determine the failure load.

De Beers Method (Fellenius, 1980)**:** The load displacement values are plotted on a double logarithmic scale, where the values may be shown to fall on two straight lines. The intersection of the lines corresponds to the failure load.

90% Criterion (Brinch Hansen, 1963)**:** The failure load is defined as the load at which the movement is twice that obtained for 90% of that load.

Slope and Tangent (Butler and Hoy, 1977)**:** The failure load is defined as the load at the intersection of a line tangent to the initial straight line portion of the load displacement curve and a line tangent to the load displacement curve where the slope of the line reaches 0.05 inches/ton).

The results of a pile load test are typically plotted as load versus displacement (movement of the pile butt). The scale of the plot should be arithmetic and should be selected so that the slope of the elastic deformation of the pile is inclined at an approximate angle of 20°.

The elastic deformation of a pile may be determined using the following equation:

$$\Delta = (QL)/(AE) \qquad (9\text{-}1)$$

where: Δ = Elastic deformation (inches)
Q = Test load (kips)
L = Pile length (inches)
A = Pile cross-sectional area (in^2)
E = Modulus of Elasticity of Pile material (ksi)

This equation is accurate for end bearing piles where no stress transfer occurs along the length of the pile. Timber piles, however, are typically friction piles or a combination of friction and end bearing. The elastic deformation will, therefore, typically be less than that determined from equation 9-1. Equation 9-1 will, however, be used in establishing the failure criteria for timber piles.

The failure load (offset limit method) of a timber pile is the load that produces a movement of the pile butt (s_f) equal to:

$$s_f = \Delta + (0.15 + D/120)) \tag{9-2}$$

where: D = Pile diameter (inches)

Figure 9-1 presents a typical pile load test load movement curve. The elastic deformation and the offset limit failure criteria are also plotted. The intersection of the failure criterion line and load movement line yields the ultimate capacity of the pile.

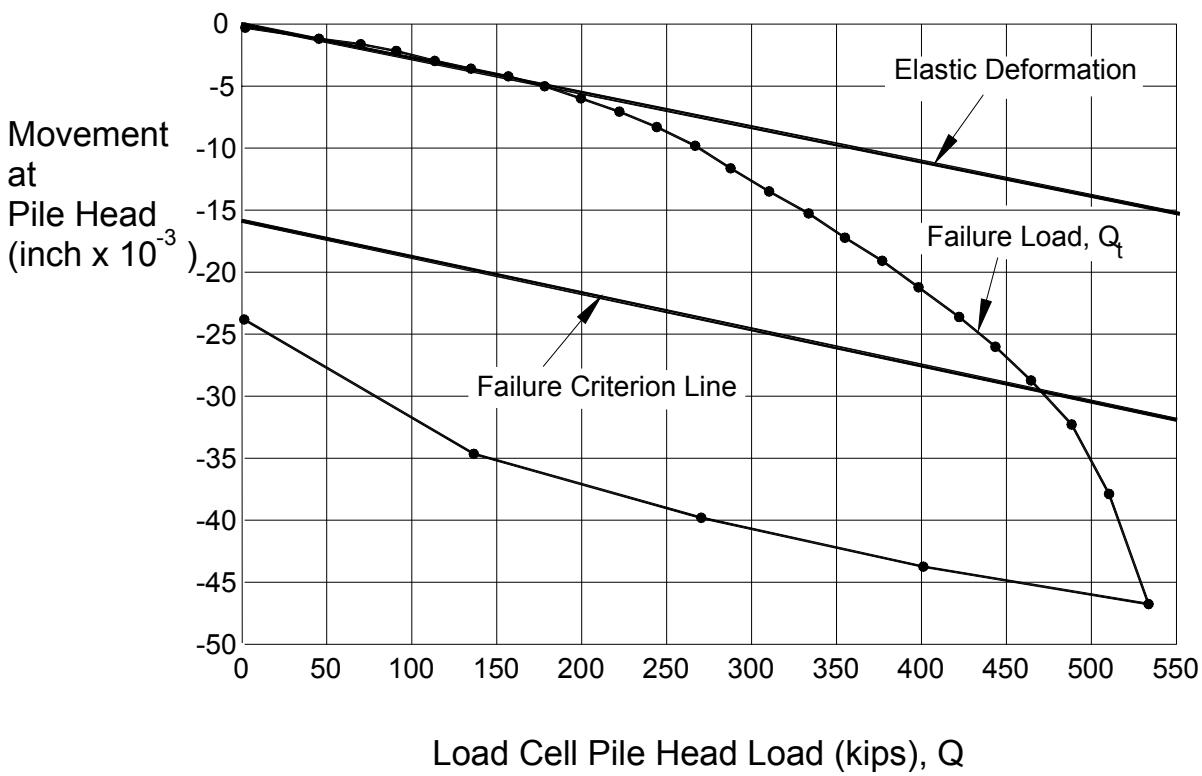

Figure 9-1: Typical static pile load test results (FHWA-HI-97-013)

CHAPTER 10.0
QUALITY ASSURANCE DURING PILE DRIVING

10.1 INTRODUCTION

The performance of a timber pile foundation system is not only a function of the design of the foundation but also its construction. If either is deficient, the performance of the foundation may not be as desired. Construction control of driven piles is much more difficult than for shallow foundations where the footing excavation and footing construction can be visually observed to assure quality. Since piles cannot be seen after their installation, direct quality control of the finished product is impossible. Construction monitoring should be exercised in three areas; pile materials, installation equipment, and the estimation of static load capacity. This chapter will focus on pile material inspection and installation equipment observations.

10.2 TIMBER PILE QUALITY REQUIREMENTS

Timber piles should be monitored at the project site to assure that they meet project specifications with respect to length, size (butt and toe diameter), sapwood, straightness, twist of grain, knots, and pressure treatment. ASTM D 25-99 *Standard Specification for Round Timber Piles* should be used for establishing the acceptance requirements for timber piles delivered to the project site.

Pile lengths should be measured and recorded along with butt and toe diameters. ASTM D 25 provides tables for determining if the timber pile meets the minimum nominal circumference measured 3 feet from the butt and toe of the pile. Piles that do not meet these requirements shall be rejected.

The straightness of the piles shall also be checked. A straight line from the center of the butt to the center of the tip shall lie entirely within the body of the pile. Piles shall also be free from short crooks that deviate by more than 2.5 inches from straightness in any 5 feet length. Sound knots shall be no larger than one sixth the circumference of the pile located where the knot occurs.

10.3 MATERIAL CERTIFICATION

Piling manufactures shall submit certification that supplied piles comply with ASTM D25 provisions and appropriate AWPA standards.

10.4 PILE DRIVING EQUIPMENT AND PILE INSTALLATION

The pile driving equipment, crane, leads, hammer, hammer cushion, and helmet are all important in the proper installation of a pile foundation. The inspector should check that the contractor's driving equipment is in accordance with the project plans and specifications. The inspector should perform the following tasks prior to pile driving:

- Verify that the pile driving hammer meets the specifications for type and size
- Hammer cushion (if used) meets the specifications for type, size, and thickness

- Helmet (drive cap) fits the pile
- The lead system conforms to the project specifications.

Inspection of the pile driving equipment during driving is important to assure that the piles are installed so that they meet the driving criteria and that the pile remains undamaged. The driving criteria is often defined as a minimum driving resistance as measured by the blow count in blows per foot or fraction thereof, and is to assure that the piles have a desired capacity. The driving resistance is also a function of the performance of the pile driving hammer. A hammer operating at lower energy levels than specified will result in pile blow counts that are higher than for the same pile, with the same capacity, with the same hammer operating at a high energy level. In order for the inspector to assure that the minimum driving criteria has been met, and therefore that the capacity is adequate, she/he must evaluate if the hammer is performing properly. Each hammer has its own operating characteristics.

During the production pile driving operation, the inspector should check the following items:

- Pile size, length and type
- Location of pile
- If pile toe protection is specified, is it installed?
- Is the pile plumb?
- Is the hammer the specified hammer, and is it working properly?
- Is the hammer cushion the correct type and thickness? Is it being replaced regularly?
- Did the pile meet the driving criteria?
- Did the pile have unusual driving criteria?
- Is there any indication of pile heave?
- Is the pile cutoff at the correct elevation?
- Has the exposed pile cut been treated?
- Is there any visual damage?

Pile driving records are an important part of the quality assurance program. The following information should appear on the pile driving records:

- Project identification number
- Project name and location
- Date and time of driving (start, stop, and interruptions)
- Name of contractor
- Hammer make, model, ram weight, energy rating. The actual stroke and operating speed should be recorded.
- Hammer cushion description, size, and thickness
- Pile location, type, size, and length
- Pile ground surface, cut off, and final penetration elevations and embedment length
- Driving resistance data in blows per foot, with the final foot normally recorded in blows per inch
- Graphical presentation of driving data
- Comments or unusual observations, including reasons for all interruptions
- Signature and title of inspector.

Driving records are an extremely important part of any deep foundation project. The records provide information which greatly assists the design engineer in assessing the adequacy of the

installed foundation system to support the design loads. No timber pile project should be complete without pile driving records.

CHAPTER 11.0
SPECIFICATIONS

11.1 INTRODUCTION

The following sample specification for timber piles is provided to illustrate the type of information that should be considered for inclusion in a specification. The traditional approach of a method and material specification is presented. The method approach requires that a site specific timber pile design be performed by the owner's engineer.

11.2 MATERIAL SPECIFICATION

SECTION 02459 - TIMBER PILES

PART 1—GENERAL

1.01 RELATED DOCUMENTS

A. Drawings and general provisions of the Contract, including General and Supplementary Conditions and Division 1 Specification Sections, apply to this section.

[Note: Drawings should indicate the plan layout and spacing of piles, pile design loads, size and length of piles, butt or tip circumference of piles, cutoff elevation of piles, details of pile shoes, location and depth of pre-excavated holes for piles, location of test piles if in permanent locations.]

1.02 SUMMARY

A. This Section includes specifications for furnishing, installing, and testing of driven piles for structures. Piles shall be end-bearing piles, friction load-bearing piles or both as indicated.

B. Supply piles of the following types as indicated:
   1. Timber piles, peeled and treated, driven.

C. Related Sections:
For bracing, pile caps and framing, see Division 6, Rough Carpentry, or Heavy Timber Construction.

1.03 DEFINITIONS

A. Test Pile: An individual pile which is observed to determine its behavior during driving and under static axial compression load.

B. Reaction Pile: An individual pile which provides the reaction load required to perform the load test on a test pile. During this process the reaction pile can be subjected to either an axial compression load or an axial tension load.

1.04 REFERENCE STANDARDS

A. American Association of State Highway and Transportation Officials (AASHTO).

AASHTO M-133. Specification for Preservative and Pressure Treatment Process for Timber.

B. American Society for Testing and Materials (ASTM).

ASTM D25 Specification for Round Timber Piles
ASTM D1143 Method of Testing Piles Under Static Axial Compressive Load
ASTM D3689 Method of Testing Individual Piles Under Static Axial Tension Load

C. American Wood Preservers' Association (AWPA)

AWPA C3. Piles - Preservative Treatment by Pressure Processes.
AWPA C14. Wood for Highway Construction - Preservative Treatment by Pressure Processes.
AWPA C18. Standard for Pressure treated Material in Marine Construction.
AWPA M4. Standard for the Care of Preservative Treated Wood Products.

1.05 SUBMITTALS

A. General: Refer to Contract Requirements for Submittals, Shop Drawings, Product Data and Samples.

B. Shop Drawings: Submit shop drawings of pile types as follows:

1. Show any structural connections such as for uplift loads.

C. Pile Driving Sequential Layout:

1. Submit layout drawings showing the proposed sequence of driving the piles.

2. On the sequential layout, show each pile identification as indicated on the Contract Drawings, its driving sequence number, type, size, load bearing capacity and pile tip elevation planned.

D. Pile Driving Record: Maintain a pile driving record during pile driving and submit it to the Project Engineer upon completion of pile driving. On the record indicate, for each pile driven, the information specified in C above, and the following: type and rating of driving equipment, overall blow count per foot, number of blows per inch penetration for the last 12 inches, and any unusual conditions encountered during driving.

E. Equipment Review and Drawings:

1. Submit complete list of the equipment proposed for use, including a description of the characteristics of each piece of driving equipment.

   a. The Project Engineer will review the proposed driving equipment, accessories, and methods of adequacy for the conditions expected to be encountered. However, the adequacy of the equipment and accessories shall remain the responsibility of the Contractor. Should the equipment used by the Contractor prove inadequate to drive the scheduled types of piles in the locations indicated, or should the use rate of accessories show damage to the piles, or should the Progress Schedule not be maintained, the Contractor shall replace, or use different types of equipment.

2. Submit shop drawings of driving accessories showing compatibility with the size configuration, handling, and driving requirements of each type of pile indicated on the Contract Drawings.

3. Submit shop drawings showing the methods and equipment proposed for loading test piles.

F. Submit data on round timber pile treatment data, including certification by treating plant stating type of preservative solution and pressure process used, net amount of preservative retained, and compliance with applicable standards.

1.06 DELIVERY, STORAGE, AND HANDLING

A. Handling, storage and field fabrication, including treating of cut ends, shall be in accordance with AWPA M4.

2.0 PART 2 – PRODUCTS

2.01 TIMBER PILES

A. Round Timber Piles: Piles shall be Southern Pine or Douglas Fir and shall conform to ASTM D 25, unused, clean peeled, uniformly tapered, one piece from butt to tip.

[Note to Specifiers - Size: Specify butt or tip diameters from Tables 3-3 through 3-9.]

B. Pressure treatment shall be in accordance with the following Use Category Standards:
Foundation piles. AWPA C3.
Land and fresh water piles. AWPA C3.
Marine piles. AWPA C3 and C18.
Highway bridge piles. AWPA C14.

Marine, dual treatment. AWPA C3.
Field treatment of cut ends and holes. AWPA M4.

C. Preservatives and Retentions:

Creosote (pcf)	Waterborne (CCA or ACZA) (pcf)			
Use Category	Southern Pine	Douglas Fir	Southern Pine CCA	Douglas Fir ACZA
Foundation	12	17	0.8	1.0
Land & Fresh Water	12	17	0.8	1.0
Marine				
N. of Delaware[1] or San Francisco[1]	16	16	1.5	1.5
S. of New Jersey[2] or San Francisco[2]	20	20	2.5	2.5
Dual Treatment[3]	20	20	1.0	1.0

1. Where Teredo is expected and Limnoria tripunctata is not expected, creosote or creosote solutions provide adequate protection.
2. Where Teredo and Limnoria tripunctata are expected and where pholad attack is not expected, either dual treatment, or high retentions of CCA for Southern Pine or ACZA for Douglas fir provide maximum protection.
3. In those areas where Limnoria tripunctata and pholad attack is expected or known, dual treatment provides the maximum protection.

D. Fabrication

1. Field-Applied Wood Preservative: Treat field cuts, holes, and other penetrations in accordance with AWPA M4.

PART 3 - EXECUTION

3.01 PILE TYPES

Piles shall be end-bearing type or friction type as indicated. Drive end-bearing piles to the required bearing value. The bearing value for each pile shall be as determined in Article 3.04. Drive friction piles to the required penetration, as indicated.

3.02 DETERMINATION OF LENGTH

A. Provide piles of such length as required to develop the specified bearing value, to obtain the specified penetration, and to extend into the cap or footing block as indicated.

B. Assume responsibility for furnishing piles of sufficient length to obtain the penetration and bearing value indicated.

3.03 TEST PILES

A. The Contract Drawings indicate the required type of piling, the required bearing value, the minimum penetration, and the estimated pile tip elevation. Estimated tip elevations are approximate, based upon subsurface explorations, and are given only to show the basis for the estimated quantities indicated in the Bid Schedule and to indicate the required lengths of test piles.

B. Order and drive the test piles. Safe bearing capacities of the test piles will be determined by methods herein specified.

C. From the test pile data and behavior and the subsurface exploration data, the Design Engineer will determine the penetration required. The Design engineer may also determine the required penetration based upon settlement criteria or any other factors which in the opinion of the Design Engineer are applicable to the work. Submit the final data to the Project Manager for evaluation.

3.04 DRIVEN PILE CAPACITY

A. Design

1. The ultimate pile capacity will be determined by the Design Engineer. Drive piles with approved driving equipment to the ordered length or other lengths necessary to obtain the required ultimate pile capacity. Jetting, predrilling or other methods to facilitate pile penetration shall not be used unless specifically permitted by the Design Engineer.

2. Penetration per blow may be measured either during initial driving or during re-driving following a set period of time as determined by the Design Engineer.

B. Practical Refusal: Practical refusal will be determined by the Design Engineer, and will be a condition where the blow count exceeds either two times the number of blows required in 1 foot or three times the number of blows required in 3 inches to achieve the required bearing value, not to exceed 5 blows per inch. Piles reaching practical refusal shall not be driven further.

3.05 PILE LOAD TESTS FOR PILES UNDER AXIAL COMPRESSION LOAD

A. Install test piles and reaction piles, of the same type and kind as permanent piles, in the locations indicated by the Design Engineer. Install test piles vertically.

B. Test piles which pass the load test in an undamaged condition, may be utilized as permanent piles in the work. Reaction piles which were used to perform the pile load test may be utilized as permanent piles in the work, provided they are not damaged and that they are not moved upward.

C. Either extract damaged test piles and reaction piles and remove from the site, or cut them off 3 feet below any structure to be installed above.

D. Comply with ASTM D1143 for pile load test apparatus, for applying load and measuring movements, and for standard measuring procedures. Perform loading procedures as follows:

1. Apply the load in load increments of 10-15% of the design load to a maximum load of 300% or failure, whichever occurs first. Maintain each test load for 2.5 minutes.

2. Measure the settlement and rebound of the test pile to the nearest 0.01 inch.

E. Do not subject reaction piles which are to become permanent piles to uplift loads greater than 70 percent of the required bearing capacity. Test reaction piles in accordance with ASTM D3689.

F. Safe bearing capacity of the test pile shall be defined as 50% of the failure load. The failure load shall be defined as the load that produces a movement of the pile butt (S_f) equal to:

$$S_f = S + (0.15 + 0.008D)$$

Where:
S_f = Settlement at failure in inches
D = Pile diameter or width in inches
S = Elastic deformation of total unsupported pile length in inches

G. The Design Engineer may require additional load tests in the event that the behavior of the test pile or any other pile shows any peculiarity, erratic action, or otherwise causes suspicion as to the reliability of the safe bearing capacity.

H. Immediately following completion of load testing, submit two copies of the test report for each test pile to the Project Manager. Include in the test report the data required by ASTM D1143.

I. Following the completion of load tests, the Design Engineer will make a determination of the required penetration.

3.06 INSTALLATION OF PILES

A. General: Provide piles of the type indicated and of the length and configuration necessary to:

1. Achieve the required penetration determined by the Design Engineer;

2. Extend into the pile cap or structure footing to the location directed by the Design Engineer; and

3. Attain indicated bearing capacity.

B. Penetration and Bearing: Install piles to the required penetration, or to the required bearing, as indicated, except as specified in Article 3.04, C and D. Jetting will not be permitted unless specifically approved by the Design Engineer for the location.

C. Predrilled Holes:

1. When necessary to achieve the required penetration, drill holes of diameter not greater than 90 percent of the average cross-sectional dimension of the pile at the depth being drilled, and drive the pile therein to practical refusal.

D. Pile Driving:

1. Complete backfill to the required elevations in the area which piles are to occupy before starting to drive piles.

2. Do not drive piles within 20 feet of concrete less than seven days old.

3. Drive piles at interior of bases of footings before driving perimeter piles.

4. If necessary, provide adequate lateral support for installed individual piles to prevent excessive temporary flexural stresses or movement of the pile top out of tolerance.

5. Maintain the hammer coaxial with the pile during the driving operation by using a combination of driving cap and leads.

6. Investigate any sudden decrease in driving resistance for possible breakage of the pile. If sudden decrease in driving resistance cannot be correlated to boring data or some incident in the driving, and if the pile cannot be inspected, such decrease in driving resistance may be cause for rejection of the pile.

7. Re-drive any pile which is raised during driving of adjacent piles, to the original tip elevation.

8. Cut off piles at top elevation directed by the Design Engineer. Replace or repair piles which are damaged when cut off.

E. Installation Tolerances:

1. Deviation from plumb and angle of batter: ¼ inch per foot of pile length, but not more than 6 inches overall.
2. Deviation from location of pile top: 6 inches.

F. Piles not meeting ASTM D25 requirements will be rejected. Remove such piles from the site and replace with sound piles. Piles broken under driving stresses may be cut off and left in place if approved by the Design Engineer for the location. Otherwise they shall be extracted and removed from the site.

G. Fit timber piles with metal shoes on the tip as shown on the Contract Drawings (when specified). When the area of the head of a timber pile is greater than that of the face of the hammer, use a suitable cap to distribute the blows throughout the cross section of the pile.

After timber piles are cut off, treat cut surfaces in accordance with AWPA M4. Remove cutoff sections of piles from the site and legally dispose.

CHAPTER 12.0
GEOTECHNICAL CONSIDERATIONS

12.1 INTRODUCTION

The design of a structure's foundation requires adequate knowledge of the subsurface conditions at the site. These site conditions obviously play a very important role in the performance of the selected foundation for the structure. Knowledge of the subsurface conditions is essential for a successful design. The two principal components of site exploration associated with timber pile foundations are surface studies and subsurface investigations. Useful information can be gathered from surface studies and from an examination of the construction records and performance of existing structures in the vicinity of the site. The surface studies should form the first phase of a site investigation, and the subsurface work should be planned only after assessing the results of the surface study.

Site investigations can be separated into two main stages: (a) desk studies and (b) field studies. Desk studies should be carried out before field studies. The engineer should visit the site during the initial phase of the investigation to get familiar with the site conditions. The planning of the field studies should be based on observations of the site conditions and findings of the desk studies with emphasis focused on the potential problem areas.

12.2 PLANNING SITE INVESTIGATION

The purpose of this phase is to obtain information about the proposed structure and general information on the subsurface conditions. The structural information can be obtained from a copy of the preliminary structural drawings for the project and speaking with the structural engineer. General information about the subsurface conditions may be obtained from a variety of sources as listed below.

12.2.1 Desk Study - Available Existing Data

Maps and Plans: Topographic maps and plans are discussed in this section. Other maps and plans include Geologic Maps and Soil Survey Maps, which are discussed in subsequent sections.

Topographic maps and plans can be used to identify geomorphological forms and drainage patterns. This information can give an indication of the materials to be found on the site. In addition, topographic maps provide information on the accessibility of the site and the terrain, both of which may determine the types of equipment to be used for exploration work. Maps do not have the detail of aerial photographs, but they enable a trained observer to surmise relevant information about the geology of a site based on landforms and drainage patterns shown. The amount of information that can be derived from such maps depends on the areas involved and on the topography.

The major source of topographic maps is the United States Geologic Survey (USGS). The USGS publishes a series of quadrangle maps, the National Topographic Map Series, which

covers the United States and its territories and possessions. Each map covers a quadrangle area bounded by lines of latitude and longitude. Maps covering areas of 7.5° of latitude by 7.5° of longitude are plotted to scales of 1:24,000 and 1:31,680. A complete list of all USGS maps is found in the U.S. Geological Survey (1965) and in the monthly supplements and may be accessed at their web site (www.usgs.org).

Topographic maps are also produced by the Army Map Service and the United States Coast and Geodetic Survey (USC&GS). Other sources of topographic information include the U.S. Army Corps of Engineers, which publishes topographic maps and charts of some rivers and adjacent shores, plus the Great Lakes and their connecting waterways; the U.S. Forest Service, which publishes forest reserve maps; and the Hydrographic Office of the Department of the Navy, which publishes nautical and aeronautical charts.

Geological Maps: Geological maps can be used to obtain information on materials and geological conditions that affect the site. Geological maps are extremely useful as part of the site exploration, but they are often based on isolated exposures and boreholes so that much of their detail is conjecture, not fact. The engineer should keep this in mind.

Geological maps include (1) bedrock geology maps, (2) structural geology maps, (3) surficial geology maps, (4) tectonic maps, (5) earthquake data maps, and (6) other useful maps, such as the glacial map of the United States and the loessial soils of the United States.

The major source of geologic maps and information is the USGS, which has published books, maps and charts in various forms since 1879. *Indexes to Geologic Mapping in the United States* is the most useful series available, which comprises a map of each state that shows the areas for which geologic maps have been published. The maps distributed by the USGS include a geologic map of the United States at a scale of 1:2,500,000 and other series of maps, such as the Geologic Quadrangle Maps of the United States at a scale of 1:24,000, Folios of the Geologic Atlas of the United States, and the Mineral Resources Maps and Charts.

Geologic information also is available from state and local governmental agencies, the Association of Engineering Geologists, the Geological Society of America, the Geo-Institute of the American Society of Civil Engineers, and local universities.

Soil Survey Maps: The soil surveys conducted by various governmental agencies also are useful sources of information for the engineer planning a subsurface exploration program. These surveys normally map the surface and near-surface soils over a large expanse of land. They are of two types: agricultural and engineering. Since both types usually encompass an entire county, the information contained in them is generalized.

Agricultural soil surveys conducted by the Soil Conservation Service (SCS) of the U.S. Department of Agriculture (USDA) are presented in reports that describe the areal extent, physiography, relief, drainage patterns, climate, and vegetation, as well as the soil deposits of the area covered. The soil survey maps are usually plotted as overlays on aerial photographs at relatively large scales. They are prepared on a county basis and illustrate the soil cover to a depth of about 6 ft. The shallow depth depicted limits their usefulness in many engineering studies. In some States, local authorities prepare engineering supplements to the agricultural survey reports. These supplements provide data on the drainage characteristics of the materials and anticipated engineering problems. County soil survey reports prepared by USDA usually show soil characteristics from depths of 3 to 15 ft.

Landslide Records: Many state highway departments, geologic surveys, and university departments have gathered records of landslides in their states. Each landslide record may consist of: (1) location of the landslide, (2) date and time of occurrence, (3) geometry of the slope before and after the landslide (which is accompanied by a photograph), (4) material of the slope, (5) possible cause that triggered the landslide, and (6) rainfall data. Locations of the landslides are usually summarized in a State or county map for future reference. These records are essential for the engineers planning exploration programs, as well as decisions regarding slope stability at the site.

Details of particular landslides sometimes can be obtained from local residents. The qualitative description of such incidents may be reasonably accurate, however the details of timing are often less reliable.

Literature: Valuable information on the geology of a site may sometimes be found from published articles in engineering and geologic journals or university publications. Most states have geological surveys or equivalent agencies responsible for gathering and disseminating geologic information. The data may take the form of geologic maps, geologic reports, and records of exploration.

Numerous articles are published by geologic organizations, whose publications are referenced in two periodicals: *Bibliography of North American Geology* published by USGS and *Bibliography and Index of Geology Exclusive of North America* by the Geological Society of America. The Association of Engineering Geologists and Geologic Society of America publish geologic maps, as well as monthly journals and special volumes that detail specific geologic topics on locales.

Previous Geologic Exploration: Geotechnical information about a site may be found in records of previous site development. These include information on site formations, site investigations, well borings, foundations used, and previous stability considerations for slopes. These records are generally held by governmental agencies, and engineers from public and private developments. Records for old developments may be scant or nonexistent. With previous site investigation data, subsurface profiles can be used to explain site geology. This information as well as local geotechnical experience is very valuable in planning geologic explorations.

12.2.2 Field Reconnaissance

The objective of this phase of the Site Investigation is to substantiate the information gained from the office phase and to plan the detailed subsurface exploration program. The field reconnaissance for a timber pile foundation should include:

- Inspection of nearby structures to determine their performance with a particular foundation type.
- Visual examination of terrain for evidence of landslides.
- Recording of the location, type and depth of existing structures which may be affected by the new structure.
- Determining what equipment will be necessary to perform the boring operation.
- Determining/observing any site conditions which may impact the constructability of the new foundation system.

12.3 GUIDELINES FOR MINIMUM SUBSURFACE EXPLORATION PROGRAM

Field exploration methods usually consist of borings and in-situ testing. Borings are usually employed to identify the subsurface stratigraphy while in-situ tests are normally used to estimate the strength and index properties of the subsurface material. Some in-situ tests such as the cone penetrometer test however, can also be used for stratigraphy identification purposes. Common boring techniques include augers and rotary wash borings in soils. In rock, coring is usually performed. Common in-situ tests include standard penetration test (SPT), cone penetrometer test, field vane shear, pressuremeter test, plate-load test, dilatometer test and various geophysics tests.

The number of borings required, their spacing, and the sampling intervals depends on the uniformity of the soil strata and loading conditions. Erratic subsurface conditions require closely spaced borings. Structures sensitive to settlements require detailed subsurface knowledge and therefore closely spaced borings. The following guidelines may be used in developing a boring plan for a project.

- A minimum of one boring per structure. For structures more than 100 feet wide, provide a minimum of two (2) borings. One boring for every 1000 square feet of building foot print.

- Estimate the required boring depths from data gathered in the planning and field reconnaissance phases. Confirmation of the proposed boring depths should be made during the boring operation by the geotechnical engineer as soon as possible after the field crews have started work.

- All borings should extend through unsuitable strata, such as soft cohesive soil or loose cohesionless soils to reach hard or dense materials. Where stiff or dense soils are encountered at shallow depths, one or more borings should extend through this material to a depth where the presence of underlying weaker strata cannot affect stability or settlement of the structure.

- Standard Penetration test (SPT) samples, when utilzed, should be obtained at 5 foot intervals or at changes in material. Undisturbed tube samples should be obtained at sites where cohesive soils are encountered.

- When rock is encountered, a select number of borings should extend a minimum of 10 feet into rock, where feasible.

- Water level readings in each bore hole should be made during drilling, at the completion of the boring, and a minimum of 24 hours after completion of the boring. Long-term evaluation of groundwater may require installation of observation wells or piezometers in the boring.

These general guidelines should result in a subsurface program that develops the necessary data to clearly identify subsurface stratigraphy and any unusual conditions, allow laboratory assessments of soil strength and compressibility, and document the groundwater conditions. This information is necessary in order to technically evaluate foundation options and their associated costs.

12.4 METHODS OF SUBSURFACE EXPLORATION

A wide variety of equipment is generally available to perform borings and to obtain soil samples. The method used to advance the boring should be compatible with the soil and groundwater conditions to assure that soil samples of suitable quality are obtained. Particular care should be exercised to properly remove all slough or loose soil from the boring before sampling. Below the groundwater level, drilling fluids are often needed in soft soils or cohesionless soils to stabilize the sidewalls and bottom of the boring. Without stabilization, the bottom of the boring may heave or the sidewalls may contract, either disturbing the soil prior to sampling or preventing the sampler from reaching the bottom of the boring. In most geotechnical explorations, borings are usually advanced with 4 inch or 6 inch diameter solid-stem augers, 2 inch to 2.5 inch inside diameter hollow-stem augers, or rotary wash boring methods using a 2.4 inch to 5 inch nominal diameter drill bit.

12.4.1 Hollow-Stem Augers

Hollow stem augers used for soil borings typically come in 5 foot lengths that are connected to one another as the auger is advanced into the ground. As the name suggests, the center of the auger is hollow. When the hole is being advanced, a plug is inserted into the hollow center of the auger. The center plug prevents soil cuttings from entering the hollow-stem auger. Most drillers prefer to advance the boring without the center plug, allowing a natural "plug" of compacted cuttings to form at the bit and thus avoiding the need to remove and replace the bit at each sample attempt. Once the augers have advanced the hole to the desired sample depth, a sampler may then be lowered through the hollow stem to sample the soil at the bottom of the hole.

Hollow-stem auger methods are commonly used in cohesive soils or in granular soil formations above the groundwater level, where the boring walls may be unstable. The augers form a temporary casing to allow sampling of the "undisturbed soil" below the bit. The cuttings produced from this drilling method have limited use for visual observation purposes. As the boring is advanced to greater depths a considerable delay may occur before the soil cuttings appear at the ground surface. The field supervisor must be aware of these limitations in identification of soil conditions between sample locations.

Significant problems can occur where hollow-stem augers are used to sample soils below the groundwater level. The unbalanced water pressure acting against the soil at the bottom of the boring can significantly disturb the soil, particularly in granular soils or soft clays. Often the soils will heave and plug the auger, preventing the sampler from reaching the bottom of the boring. Where heave or disturbance occurs, the penetration resistance to the driven sampler can be significantly reduced. For these reasons, and others, it is considered advisable to halt the use of hollow-stem augers at the groundwater level and to convert to rotary wash boring methods.

12.4.2 Rotary Wash Borings

The rotary wash boring method is generally the most appropriate method for use in soil formations below the groundwater level. In rotary wash borings, the sides of the borehole are supported either with casing or with the use of a drilling fluid. Where drill casing is used, the boring is advanced sequentially by a) driving the casing to the desired sample depth, b) cleaning out the hole to the bottom of the casing, and c) inserting the sampling device and obtaining the sample from below the bottom of the casing.

The casing is usually selected based on the outside diameter of the sampling or coring tools to be advanced through the casing, but may also be influenced by other factors such as stiffness considerations for borings in water bodies or very soft soils, or dimensions of the casing couplings. Casing for rotary wash borings is typically furnished with inside diameters ranging from 2.25 in to 5 in. Even with the use of casing, care must be taken when drilling below the groundwater table to maintain a head of water within the casing above the groundwater level at all times. Failure to maintain an adequate head of water may result in loosening or heaving (blow-up) of the soil to be sampled beneath the casing.

12.4.3 Test (Exploration) Pit Excavation

Test pits and trenches permit detailed examination of the soil and rock conditions at a relatively low cost but are limited to shallow depths. Exploration pits can be an important part of geotechnical explorations where significant variations in soil conditions occur (vertically and horizontally), large soil and/or non-soil materials exist (boulders, cobbles, debris) that cannot be sampled with conventional methods, or buried features must be identified and/or measured or on sites with fill.

Test pits are generally excavated with mechanical equipment (e.g., backhoe) rather than by hand excavation. The depth of the test pit is determined by the exploration requirements, but is typically about 5 to 10 feet. In areas with high groundwater level, the depth of the pit may be limited by the water table. Test pit excavations are generally uneconomical at depths greater than about 15 feet.

During excavation, the bottom of the pit should be kept relatively level so that each lift represents a uniform horizon of the deposit. At the surface, the excavated material should be placed in an orderly manner adjoining the test pit in separate stacks to identify the depth of the each material.

The U.S. Department of Labor's Construction Safety and Health Regulations, as well as regulations of any other governing agency, must be reviewed and followed prior to excavation of the test pit, particularly in regard to shoring requirements.

12.5 SOIL AND ROCK SAMPLING

One of the main purposes of a subsurface exploration is to obtain quality soil and rock samples. From these quality samples, soil identification, stratification, strength, and compressibility are evaluated.

Soil samples obtained for engineering testing and analysis are either undisturbed or disturbed samples. Undisturbed samples are typically obtained in cohesive soil strata for use in laboratory testing to determine the engineering properties of those soils. It should be noted that the term “undisturbed” soil sample refers to the relative degree of disturbance to the soil’s in-situ properties. Undisturbed samples are obtained with specialized equipment designed to minimize the disturbance to the in-situ structure and moisture content of the soils. Specimens obtained by undisturbed sampling methods are used to determine the strength, stratification, permeability, density, consolidation, dynamic properties and other engineering characteristics of soils.

Disturbed samples are those obtained using equipment that destroy the macro structure of the soil but do not alter its mineralogical composition. Specimens from these samples can be used

for determining the general lithology of soil deposits, for identification of soil components and general classification purposes, for determining grain size, Atterberg limits and compaction characteristics of soils, as well as for correlations to other engineering characteristics (i.e., permeability, strength). Disturbed samples can be obtained with mechanical or hand augers, split barrel samplers, small excavation machines, or small hand tools.

12.5.1 Soil Samplers

A wide variety of samplers are available to obtain soil samples for geotechnical engineering projects. These include standard sampling tools which are widely used as well as specialized types which may be unique to certain regions of the country to accommodate local conditions and preferences. The following is a general guideline to assist geotechnical engineers and field supervisors select appropriate samplers, but in many instances local practice will control. The more commonly used types of samplers are:

Split Barrel Sampler: The primary disturbed sampling method is the split-barrel (or split spoon) sampler. The split-barrel sampler is used to obtain samples in all types of soils. It is typically used in conjunction with the Standard Penetration Test (SPT), as specified in AASHTO T 206 and ASTM D 1586, in which the sampler is driven with a 120 pound hammer dropping from a height of 30 inches. The sampler is typically driven 18 inches, and the blow count for each 6 inch increment is recorded. The number of blows required to advance the sampler from a penetration depth of 6 inches to a penetration depth of 18 inches is the SPT resistance value, N. The N value provides an indication of the soil density and shear strength. **SPT N values are commonly used for design of pile foundations in granular (cohesionless) soils. SPT N values are not recommended for pile design in cohesive soils.** For a detailed discussion of pile design see Chapters 5 and 6.

The 1.5 inch inside diameter standard split barrel sampler has an outside diameter of 2 inches and a cutting shoe with an inside diameter of 1.37 inches (Figure 12-1). This corresponds to a relatively thick-walled sampler with an area ratio defined by Hvorslev (1949) of 112 percent. This high area ratio disturbs the natural characteristics of the soil being sampled; therefore samples obtained as such are considered disturbed.

When the shoe and the sleeve of this type of sampler are unscrewed from the split barrel, the two halves of the barrel may be separated and the sample may be extracted easily. The soil sample is removed from the split-barrel sampler and placed and sealed in a glass jar, or sealed in a plastic bag. Separate containers should be used if the sample contains different soil types.

Thin Wall Sampler: The thin-wall tube (Shelby) sampler is commonly used to obtain relatively undisturbed samples of cohesive soils for strength and consolidation testing. The sampler commonly used (Figure 12-2) has a 3 inch outside diameter, a 2.85 inch inside diameter and a corresponding area ratio of 9 percent. Larger diameter sampler tubes are often used where higher quality samples are required and sampling disturbance must be reduced. The test method for thin-walled tube sampling is described in AASHTO T 207 and ASTM D 1587.

The thin-walled tubes are manufactured using carbon steel, galvanized carbon steel, stainless steel, and brass. The carbon steel tubes are often the lowest cost tubes but may be unsuitable if the samples are to be stored in the tubes for more than a few days or if the inside of the tube becomes rusty which significantly increases the friction between the tube and the soil sample.

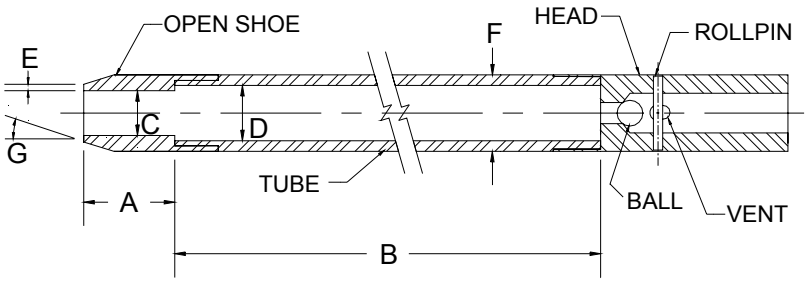

A = 25 to 50 mm
B = 0.457 to 0.762 mm
C = 34.93 ± 0.13 mm
D = 38.1 ± 1.3 - 0.0 mm
E = 2.54 ± 0.25 mm
F = 50.8 ± 1.3 - 0.0 mm
G = 16.0° to 23.0°

Figure 12-1: Split spoon sampler

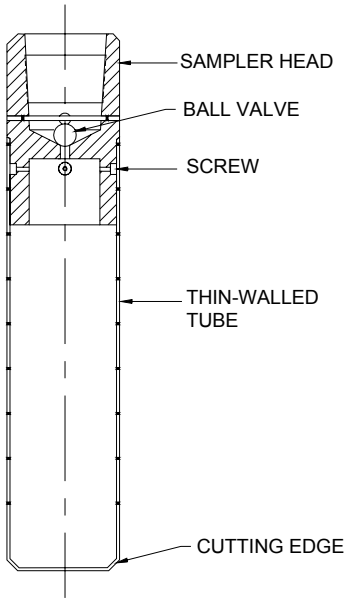

Figure 12-2: Thinned wall sampler

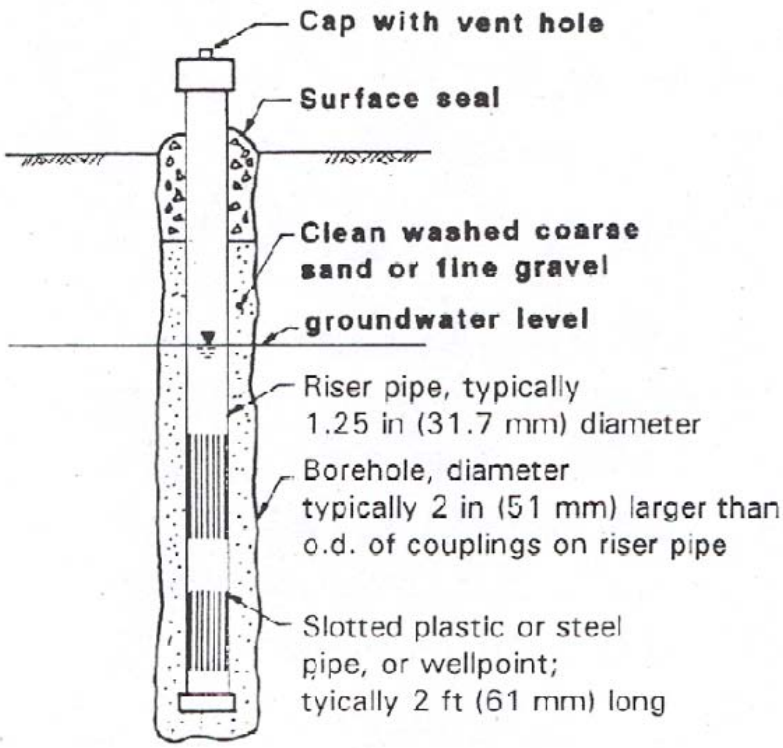

Figure 12-3: Schematic of Observation Well

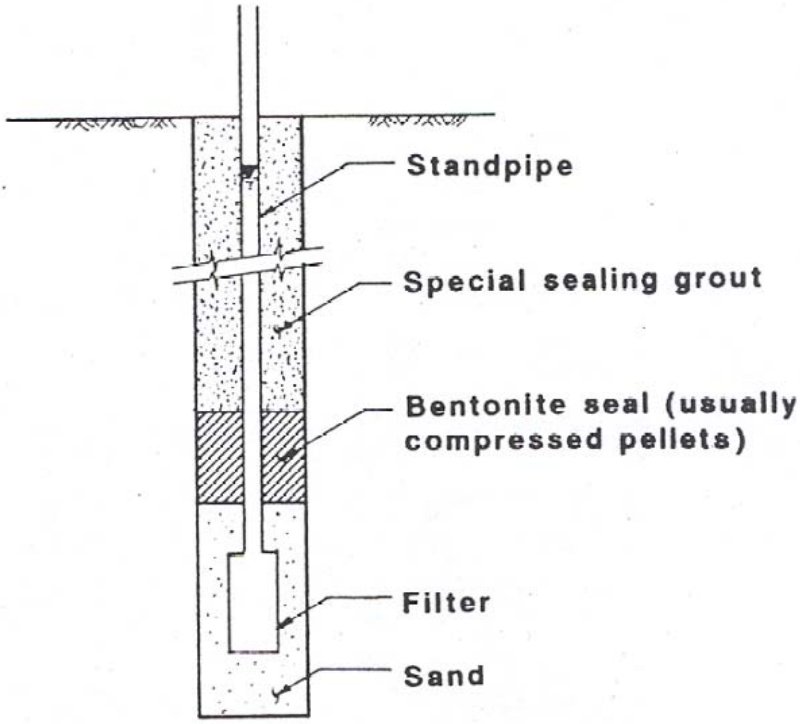

Figure 12-4: Schematic of Open Standpipe Piezometer Installed in a Borehole

In stiff soils, galvanized carbon steel tubes are preferred since carbon steel is stronger, less expensive and galvanizing provides a degree of protection from corrosion.

The thin-walled tube sampler should be slowly pushed with a single, continuous motion using the drill rig's hydraulic system. The hydraulic pressure required to advance the thin-walled tube sampler should be noted and recorded on the log. After the push is completed, the driller should wait at least ten minutes to allow the sample to swell slightly within the tube, then rotate the drill rod string through two complete revolutions to shear off the sample, and slowly and carefully bring the sample to the surface. In stiff soils, it is often unnecessary to rotate the sampler.

Piston Sampler: The piston sampler is basically a thin-wall tube sampler with a piston, piston rod, and a modified sampler head. This sampler, also known as Osterberg or Hvorslev sampler, is particularly useful for sampling soft soils although it can also be used in stiff cohesive soils as well.

The sampler, with its piston located at the base of the sampling tube, is lowered into the borehole. When the sampler reaches the bottom of the hole, the piston rod is held fixed relative to the ground surface and the thin-wall tube is pushed into the soil slowly by hydraulic pressure or mechanical jacking. The sampler is never driven. Upon completion of sampling, the sampler is removed from the borehole and the vacuum between the piston and the top of the sample is broken by means of a vacuum-breaking device provided for this purpose in the piston. The piston head and the piston are then removed from the tube and jar samples are taken from the top and bottom of the sample for identification purposes.

The quality of the samples obtained in this manner is excellent and the probability of obtaining a satisfactory sample is high. One of its major advantages is that the fixed piston tends to prevent the entrance of excess soil at the beginning of sampling, thus precluding recovery ratios greater than 100 percent. It also tends to prevent too little soil from entering near the end of sampling. Thus, the opportunity for 100 percent recovery is enhanced. The head used on this sampler also acts more positively to retain the sample than the ball valve of the thin-wall tube (Shelby) samplers.

12.6 GROUNDWATER CONDITIONS

Accurate groundwater level information is needed to determine the effect of soil stress and is vital for performing foundation design. Water level readings in each bore hole should be made during drilling, at the completion of the boring, and at a minimum of 24 hours after completion of the boring. Long-term evaluation of groundwater may require installation of observation wells or piezometers in the boring and may be required to evaluate the long-term performance of the timber piles.

The phreatic surface is defined by the free groundwater level. This surface may be delineated in the field by using open standpipes or piezometers (Figures 12-3 and 12-4). The observed water levels in standpipes and piezometers, installed at different depths, can be used to assess the phreatic surface.

12.7 SUBSURFACE PROFILE DEVELOPMENT

A subsurface profile is a visual representation of surface conditions interpreted from subsurface explorations and laboratory testing. Uncertainties in the development of a subsurface profile usually indicate that additional exploration and/or laboratory testing is required. When borings

are completed and laboratory classification is done, the initial profile should be prepared. Over-complication of the profile by noting small variations between adjacent samples should be avoided. It is recommended that the vertical and horizontal scale of the profile be equal. This is necessary so that the slope of all strata surfaces is shown at the true angle. The final profile should include the average physical properties of the soil deposits including unit weight, shear strength, and a visual description of each deposit. The observed groundwater level should also be included in the profile. This profile will be instrumental during the design of the foundation system.

12.8 IN-SITU SOIL TESTING

In-situ tests are used to provide field measurements of soil and rock properties. In-situ tests are used extensively where standard drilling and sampling methods cannot be used to obtain high quality undisturbed samples. Undisturbed samples of cohesionless soils are difficult to obtain and test in the laboratory. Soft saturated cohesive soils are also difficult to sample without disturbance. In-situ testing may be used in these soils to overcome these difficulties.

The in-situ tests that are used primarily to provide information for the design of timber pile foundations are the cone penetration test (CPT), the vane shear test, and the SPT (previously discussed in section 12.5.1). The CPT and vane shear test will be covered in the following paragraphs. Other lesser used tests like the pressuremeter test (PMT), the dilatometer test (DMT) and the dynamic cone penetration test (DCPT) are not covered in this manual. For more information of these tests see FHWA-HI-97-013 *Design and Construction of Driven Pile Foundations* and FHWA-HI-97-021 *Subsurface Investigations.*

12.8.1 Cone Penetration Test (CPT)

The cone penetration test is a simple test that is becoming very widely used in soft clays and in fine to medium coarse sands. As a soil profile tool, the CPT is unequalled with respect to the delineation of stratigraphy and the continuous rapid measurement of geotechnical parameters (i.e., friction and bearing). A CPT rig may complete 300 to 1000 feet of CPT testing in a day, depending upon equipment and soil conditions.

Electric cones are the CPT of choice in the U.S. This manual will, therefore, concentrate only on the electrical cone penetrometer. Figure 12-5 shows the typical configuration of an electrical CPT. The electric CPT consists of a conical tip and cylindrical friction sleeve mounted to the end of a series of hollow rods. The conical tip has a 60° point angle and a base diameter of 1.4 inches. This results in a projected area of 1.55 in^2. The friction sleeve has the same outside diameter as the base diameter of the cone. A set of hydraulic rams is used to push the CPT into the soil at a rate of 2 to 4 ft/min. Continuous electric signals from strain gages mounted in the cone to measure the cone tip resistance (q_c) and the sleeve friction resistance (f_s) are transmitted by a cable in the rods to a data acquisition system. For more details on the procedures for conducting CPT see ASTM D – 3441-98. Figure 12-6 shows typical data presentation for CPT. This includes the tip resistance (q_c), the sleeve friction resistance (f_s), and the friction ratio (R_f) (the ratio of sleeve friction to tip resistance (f_s/q_c)).

The stratigraphy at a site may be estimated using CPT data. The cone penetration test induces complex changes in stresses and strains around the cone tip. A comprehensive theoretical model of the cone/soil interaction has not yet been developed. The interpretation of CPT data is, therefore, made with empirical correlation. Robertson and Campanella (1986) have done

extensive work in correlating CPT data with soil classification. A simplified soil classification chart for a standard electronic CPT is presented in Figure 12-7.

The development of a soil profile based on CPT data may be difficult to achieve when thin layers are present. The cone penetration tip resistance is influenced by the soil properties in front of and behind the tip. The distance with which the cone tip senses an interface increases with increasing overburden pressure (i.e., depth). For the standard CPT, the minimum stiff layer thickness to ensure full tip resistance is 15 – 30 inches. Therefore, if a sand layer is less than 30 inches thick, and located between two soft clay layers, the cone penetration resistance may not be fully reached and the relative density of the sand may be underestimated. The continuous monitoring of pore pressures during cone penetration can considerably improve the identification of the soil stratigraphy (Campanella et al 1983). The pore pressure responds to the soil type in the immediate area of the cone tip. A marked change in pore pressure will be observed when passing from a cohesive soil to a non-cohesive soil and vice versa.

In addition to the important soil stratigraphy information that is provided from the CPT, it provides data that may be used in the design of the pile capacity. The CPT is, in effect, a “model pile” that is pushed into the ground and typically correlates well to the performance of a full-size pile under static loading conditions.

12.8.2 Vane Shear Test

The vane shear test is an in-situ test that was developed to measure shear strength of cohesive soils. The test procedure requires pushing a four-bladed vane into undisturbed soil and rotating the vane until a cylindrical volume of the soil, theoretically having height and diameter dimensions the same as the vane, fails in shear (Figure 12-8).

The failure mode around a vane is complex. The test interpretation is based on the simplified assumption of a cylindrical failure surface corresponding to the periphery of the vane blade. The undrained shear strength can be calculated from the measured torque, provided that the shear strengths on the horizontal and vertical planes are assumed equal. In general, the ratio of horizontal to vertical shear strength is less than unity. Therefore, the field vane shear strength is typically conservative along a vertical plane. The field vane shear test generally provides the most accurate undrained shear strength values for clays with undrained shear strengths of less than 1000 lbs/ft^2.

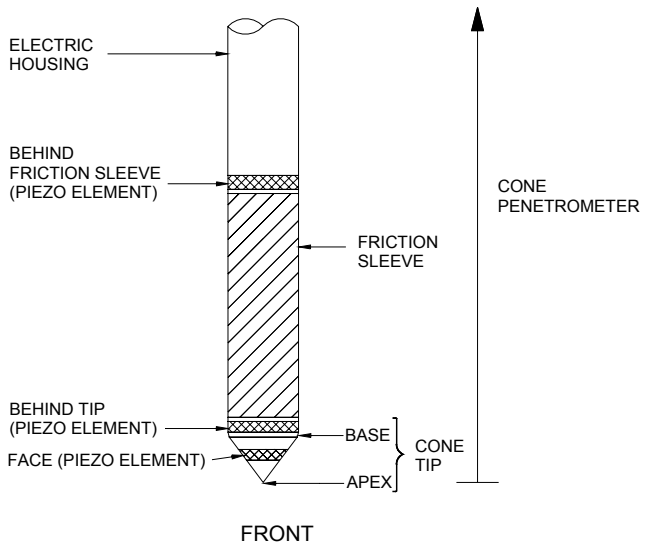

Figure 12-5: Cone Penetrometer (CPT)

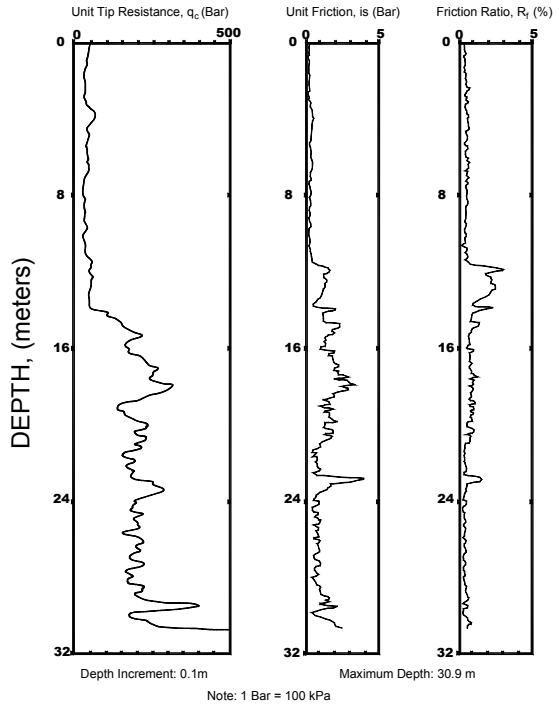

Figure 12-6: Typical CPT Data

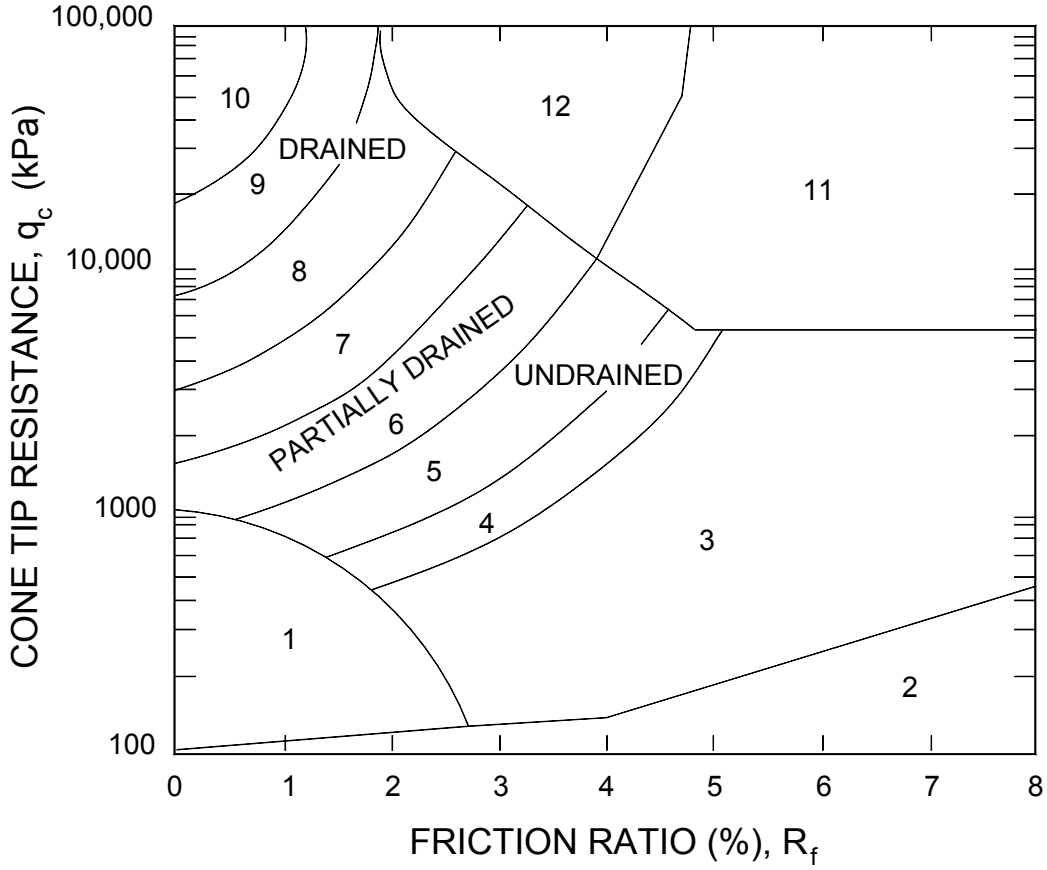

Zone	q_c/N	Soil Type
1	2.0	Sensitive fine grained
2	1.0	Organic clay
3	1.0	Clay
4	1.5	Silty clay to clay
5	2.0	Clayey silt to silty clay
6	2.5	Sandy silt to clayey silt
7	3.0	Silty sand to sandy silt
8	4.0	Sand to silty sand
9	5.0	Sand
10	6.0	Gravelly sand to sand
11	1.0	Very stiff fine grained (Silt and or clay)
12	2.0	Sand to clayey sand

Figure 12-7: Correlation Soil Type to CPT Cone Tip Resistance and Sleeve Friction Ratio (Robertson, et al., 1986)

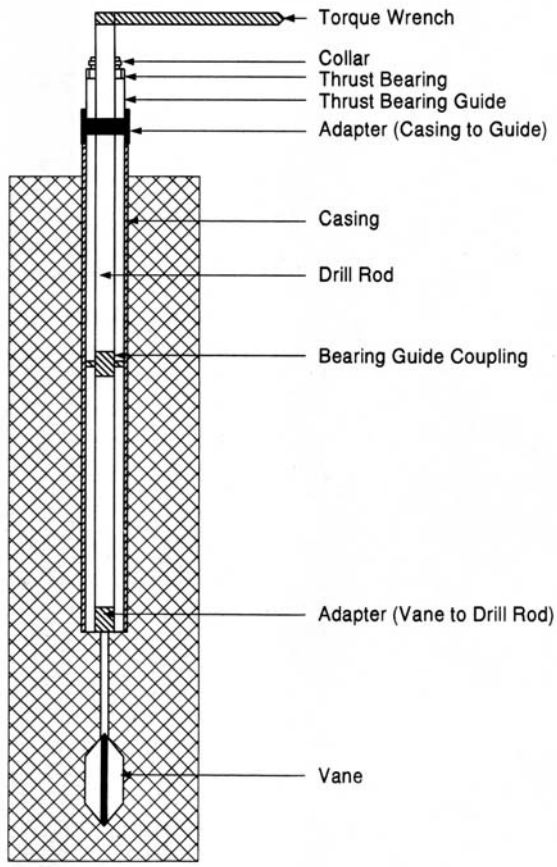

Figure 12-8: Vane shear device

12.9 LABORATORY SOIL TESTING

The design of timber pile foundations requires an evaluation of the soil shear strength properties. For cohesionless soils, in-situ testing (i.e., SPT and CPT) will be the primary tools for estimating strength and compressibility soil parameters. **For cohesive soils, the use of SPT resistance values for estimating the shear strength and compressibility of the soil is not recommended.** For soft sensitive clays, where undistubed samples are difficult to obtain, in-situ vane shear tests may be used to estimate the shear strength parameters of the clay. However, whenever undisturbed samples can be obtained, laboratory testing should be performed to evaluate the compressibility and shear strength parameters of the clay.

The purpose of this chapter is to present a summary of laboratory tests performed to determine basic soil properties required for timber pile design. For detailed information on laboratory testing, see FHWA HI-97-021 *Subsurface Investigations.*

The laboratory tests that will be briefly covered in this chapter are categorized as follows :

- Index tests
- Shear strength tests
- Consolidation tests

The following subsections briefly decribe each type of test.

12.9.1 Index Tests

Index tests are used to classify a soil for geotechnical engineering purposes. The classification of the soil enables geotechnical engineers to communicate information about a soil in common terminology, which results in engineers using data from other engineers in predicting foundation performance, based on correlations between engineering properties and soil classification. The classification of soil determines the type of material, its general characteristics, and what additional testing may be required to determine the consolidation and shear strength properties of the soil. The index tests that are use to classify soils are :

- Moisture Content (ASTM D 2216-98 Test Method for Laboratory Determination of Water (Moisture) Content of Soil and Rock)

- Particle Size Distribution (ASTM D 422-98 Test Method for Particle Size Analysis of Soils)

- Atterberg Limits (ASTM D 4318-98 Test Method for Liquid Limit, Plastic Limit, and Plasticity Index for Soils)

- Unit Weight (ASTM D 4254-91 Test Method for Minimum Index Density and Unit Weight of Soils and Calculation of Relative Density)

12.9.2 Shear Strength Tests

A saturated soil mass consists of two distinct phases: the soil skeleton and the water-filled pores between the soil particles. Normal stresses imposed on such a soil will be sustained by the soil skeleton and, if the soil is fully saturated, by the pore water. Typically, the skeleton transmits normal and shear stresses at the inter-particle points of contact, and the pore water will exert a hydrostatic pressure that is equal in all directions (i.e. no shear resistance). The stresses sustained by the soil skeleton are known as *effective stresses,* and the hydrostatic stress from the water in the voids is known as *pore water pressure.*

It is the effective stress that controls the behavior of soil rather than the total stress or pore water pressure. Thus, if the soil particles are to be packed into a denser arrangement, it is the effective stress, rather than the total stress, that must be increased. When the total stress is increased, the increase is initially sustained by an identical increase in the pore water pressure, leaving the effective stresses unchanged. Only as pore water is allowed to escape the soil mass is stress transferred to the soil skeleton.

This correlation of effective stress with soil behavior, especially compressibility and strength, is known as the *principle of effective stress*. The effective stress, σ', acting on any plane within the soil mass is defined by:

$$\sigma' = \sigma - u \qquad (12\text{-}1)$$

where σ is the *total stress* acting on the plane and u is the *pore water pressure*. The total stress is equal to the total force per unit area acting perpendicular to the plane, and the pore water pressure may be determined from the groundwater and loading conditions. It should be noted that the effective stress cannot be calculated directly. It is always calculated indirectly with information about the total stress and the pore water pressure.

Most natural, saturated soils derive their strength from the friction at the inter-particle contacts. Since the shear stresses at the particle contacts are frictional, the strength is directly controlled by the effective stresses. The shear strength of a soil is described via the Mohr-Coulomb failure envelope, which may be determined using a variety of tests (i.e., direct shear and triaxial).

Soils that consist predominantly of fine-grained clayey particles may have considerable cohesive strength under undrained conditions. This cohesive behavior is usually caused by inherent negative pore pressures within the soil mass that lead to positive effective stresses, which simulates the effect of a confined sample (e.g. “apparent cohesion”).

Sometimes a load can be applied to a fine-grained sample at such a slow rate that no excess pore water pressures are generated. The shear strength obtained under this condition is termed the drained shear strength. The drained shear strength is normally used in an effective stress analysis while the undrained shear strength is used in a total stress analysis. **Timber pile foundation design will typically use the drained (i.e., effective stress) shear strength of the soil.**

Quantification of the shear strength of the foundation soil is essential for the design of timber pile foundations. Shear tests on soil samples are performed to determine the effective cohesion (c’), and the effective angle of internal friction (ϕ’). The effective cohesion is the inter-particle attraction effect and is independent of effective normal stress (σ_n’). The internal friction angle depends on the interlocking of soil particles and the resistance to sliding between the grains.

The effective shear strength of soil is defined by the Mohr-Coulomb failure criteria as:

$$\tau = c' + \sigma_n' \tan \phi' \qquad (12\text{-}2)$$

For timber pile foundation design, the resistance along the pile shaft and at the pile tip are a function of the shear strength parameters (τ , c’, and ϕ’).

Direct Shear Test

The direct shear test (ASTM D 3080-98) is performed by placing a specimen into a cylindrical or square shaped direct shear box which is split in the horizontal plane (Figure 12-9(a)). A normal (vertical) load is applied over the specimen. The lower portion of the box is held stationary while a horizontal load is exerted on the upper part of the box to shear the soil sample on the predetermined horizontal plane. The results of a series of direct shear tests are plotted in the form of normal load versus shear strength or stress at failure (Figure 12-9(b)). The cohesion and internal friction angle of the soil may be determined from the plot of the test results.

The direct shear test has several shortcomings which must be understood prior to using the results. The failure plane is predefined and horizontal. This failure plane may not be the weakest

failure plane for the soil. The area of the failure plane decreases as the test progresses. This is incorporated into the calculation to prevent errors in computing the unit stress. The distribution of normal stresses and shearing stresses over the sliding surface is not uniform, which results in progressive failure of the specimen; therefore, the entire strength of the specimen is not mobilized.

The direct shear test is commonly used to assess the shear strength of cohesionless soils. Research has shown that for soils with angles of internal friction of 35 degrees or higher, the direct shear test may produce results as much as 4 degrees higher than the triaxial test.. Below 35 degrees there appears to be good correlation with values obtained by triaxial tests (FHWA NHI 01-031).

Triaxial Test

The most versatile shear strength test is the triaxial compression test. The triaxial test allows a soil sample to be subjected to three principal stresses under controlled conditions. A cylindrical test specimen is encased in a rubber membrane and placed inside a plastic cylindrical chamber that is usually filled with water or glycerine. The sample is then subjected to a confining pressure. To cause shear failure in the sample, axial stress is applied. A plot of normal stress versus shear stress is developed and the shear strength parameters c' and ϕ' are determined. There are three typical types of triaxial tests that are performed on a specimen, depending on the desired shear strength parameters: undrained unconsolidated (UU); consolidated undrained (CU); and consolidated drained (CD).

The UU test is fast and is mainly used in cases where the subgrade soils will be loaded quickly without allowing time for foundation consolidation. The CU test with pore pressure measurements during testing allows for the determination of the undrained shear strength parameters (total stress strength parameters c and ϕ) and the effective shear strength parameters (c', and ϕ'). The CD test is performed by first consolidating the specimen. CD tests are used to determine the drained shear strength parameters.

Total stress and effective stress timber pile design methods are presented in Chapter 4. The total stress methods use undrained shear strengths and the effective stress design methods use drained shear strength data.

Discrepancies Between Field and Laboratory Strengths

There are many ways in which the sample strength measured in the laboratory can differ from the field or in-situ strength (Skempton and Hutchinson, 1969). These include: (1) sampling, (2) sample size, (3) sample orientation, (4) rate of shearing, (5) softening upon removal of load by excavation, and (6) progressive failure. Sampling and sampling size will be discussed in the following paragraphs as they directly affect the shear strength parameters for pile design .

In addition to the factors mentioned above, the shear strength of a given soil is also dependent upon the degree of saturation, which may vary with time in the field. Because of the difficulties encountered in assessing test data from unsaturated samples, it is recommended that laboratory test samples be saturated prior to shearing in order to measure the minimum shear strengths. Unsaturated samples should only be tested when it is possible to simulate in the laboratory the exact field saturation and loading conditions relevant to the design.

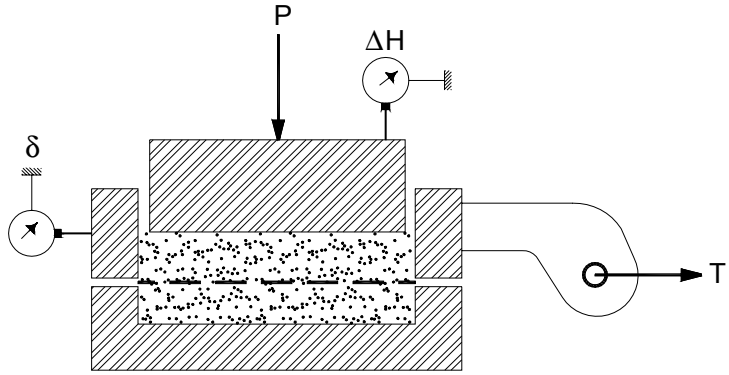

(a) Direct shear device

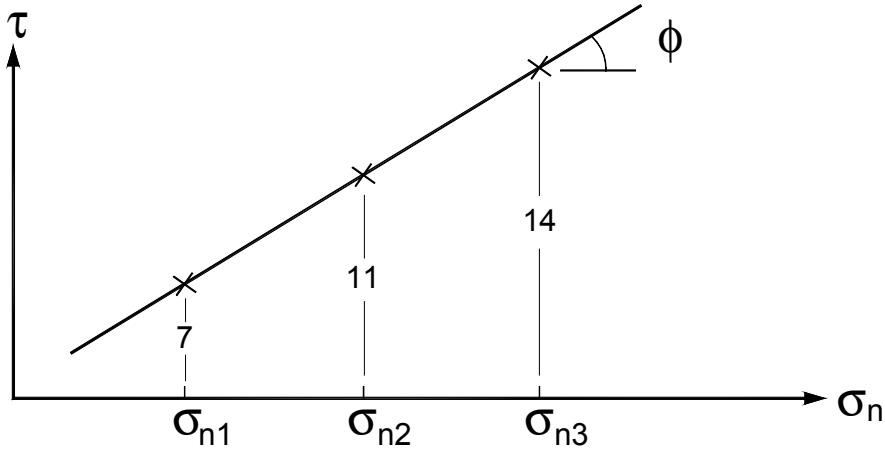

(b) Direct shear results

Figure 12-9: a.) Direct shear device, b.) Plot of results from direct shear test.

Sampling for Shear Strength Tests

Design predictions based on laboratory shear strengths and compressibility characteristics may have limitations for both slightly and heavily overconsolidated clays of high plasticity. This is attributed to the difficulty of obtaining representative samples, measurement of reliable pore pressures, and the impact of fissuring.

Samples obtained using thin-walled piston samplers or Shelby tubes are recommended when obtaining samples of cohesive soils. The sample disturbance is likely to affect the sample's water content, voids ratio, and structure, which will lead to a poor estimation of in-situ shear strength. Table 12-1 provides a summary of the various features that are likely to disturb the soil samples, thus affecting the properties measured in laboratory tests. In general, sampling and disturbance will tend to reduce the measured strength of the soil. In soft clays, even the

best sampling technique will lead to some reduction in undrained strength because of the changes in total stresses inevitably associated with sampling from the ground. The effect of sample disturbance is most severe in soft sensitive soils and appears to become more significant as the sampling depth increases.

Sample Size for Shear Strength Tests

Ideally, samples should be sufficiently large to contain a representative selection of all the particles and all the discontinuities in the soil. This is particularly true for fissured clays for which the sample size can play an important role. For 1.5 inch by 3.0 inch triaxial samples, a wide scatter is usually found among the results, principally because of fissures that may or may not be present in the test specimen. In this case, samples of at least 4 inches in diameter should be tested, and an average strength should be selected on the basis of a considerable number of tests.

12.9.3 Consolidation Tests

The one-dimensional consolidation test (ASTM D 2435) is commonly used to determine the compressibility of clays. Settlement due to consolidation can be estimated from the slope of the one-dimensional consolidation test void ratio (e = volume of void/volume of solids) versus the logarithm of the vertical effective stress (σ'_v) curve (Figure 12-10). This procedure is generally used in practice despite the fact that not all points beneath the foundation undergo one-dimensional compression.

The slope of the one-dimensional consolidation test is typically nonlinear and it is convenient to use the logarithmic scale for stress. Soils subjected to stress-void ratio states corresponding to line a-b in Figure 12-10 are called normally consolidated soils. The highest level of stress to which normally consolidated soils are subjected is due to existing overburden loads. Soils in this state are compressible and may experience relatively large settlements when the effective stress is increased.

The slope of the a-b line of the e-log σ'_v curve is defined as the compression index (C_c) (Figure 12-10). Although C_c can be expected to vary with stress level, it can be taken as constant over the relevant stress range for the soils that will be considered likely candidates for shallow foundations (when e<1). Numerous correlations have been made between C_c and common index tests for normally consolidated soils and several are included in Table 12-2. Note that the values of C_c can vary by as much as a factor of 5 (using the average trend line) in these empirical correlations, and they should not be used for final design.

The effective vertical stress at which the soil begins to undergo a substantial compressibility is called the preconsolidation pressure (σ'_p). This stress can be considered as equivalent to the onset of yield, where plastic strains develop. It also represents the loads to which the soil had been subjected in the past, which resulted in consolidation (or over-consolidation) of the soil stratum. The strains that develop at pressures below the preconsolidation pressure (to the left of σ'_p in Figure 12-10) are normally considered to result from minor slipping at the soil interparticle contacts. The magnitude of σ'_p is influenced by the largest stress to which the soil has been subjected, and the strength of the bonding and cementation. The more bonding and cementation in the soil, the more abrupt the change in the slope of the void ratio-effective stress curve once the stress level exceeds σ'_p.

TABLE 12-1
SOURCES OF SAMPLE DISTURBANCE IN COHESIVE SOILS
(AFTER JAMIOLKOWSKI, ET AL., 1985)

CONDITION	ITEM	REMARKS
Stress Relief	Change in stresses because of drilling hole.	Excessive reduction in σ_v because light drilling mud causes excessive deformations in extension. Overpressure causes excessive deformation in compression.
	Eventual removal of in-situ stress	Resultant shear strain should usually be small
	Eventual reduction (removal) of confining stress	Loss of negative u (soil-suction) caused by presence of coarser-grained materials. Expansion of gas (bubbles and/or dissolved gas)
Sampling Technique	Sample geometry: Diameter/Length Area ratio Clearance ratio Accessories, i.e. piston, coring tube, inner foil, etc.	These variables affect: Recovery ratio Adhesion along sample walls Thickness of remolded zone along interior wall
	Method of advancing sampler	Continuous pushing better than hammering
	Method of extraction	To reduce suction effect at bottom of sample, use vacuum breaker
Handling Procedures	Transportation	Avoid shocks, changes in temperature, etc.
	Storage	Best to store at in-situ temperature to minimize bacteria growth, etc. Avoid chemical reactions with sampling tube. Opportunity for water migration increases with storage time.
	Extrusion, trimming, etc.	Minimize further straining (i.e., be particularly careful)

The slope of the e-log σ'_v curve at vertical stresses less than σ'_p is called the recompression index (C_r). The recompression index of the soil is significantly smaller than the compression index. The ratio of C_r/C_c typically ranges from 0.02 to 0.20 (Terzaghi, and Peck, 1967). The low value is typical of highly structured and bonded soft clay or silt, while the largest ratio corresponds to micaceous silts and fissured stiff clays and shales. In reality, the value of C_r depends upon whether loading or unloading is occurring, since some hysteresis does occur when the soil is subjected to cycles of loading and unloading.

Generally, it is sufficiently accurate to assume C_r is constant for unstructured clays. It may not be adequate to rely on a single value of C_r, for loading and unloading, in the case of highly structured soft clays (seldom candidates for shallow foundations) or stiff clay shales. In the case of highly structured soft clays (Terzaghi, and Peck, 1967) the initial value of C_r is steep, as a result of flocculation (edge to face structure of clays) and bonding that allows the soil to be stable at high void ratios until the stress exceeds σ'_p. The subsequent rebound slope can be significantly different than the initial C_r.

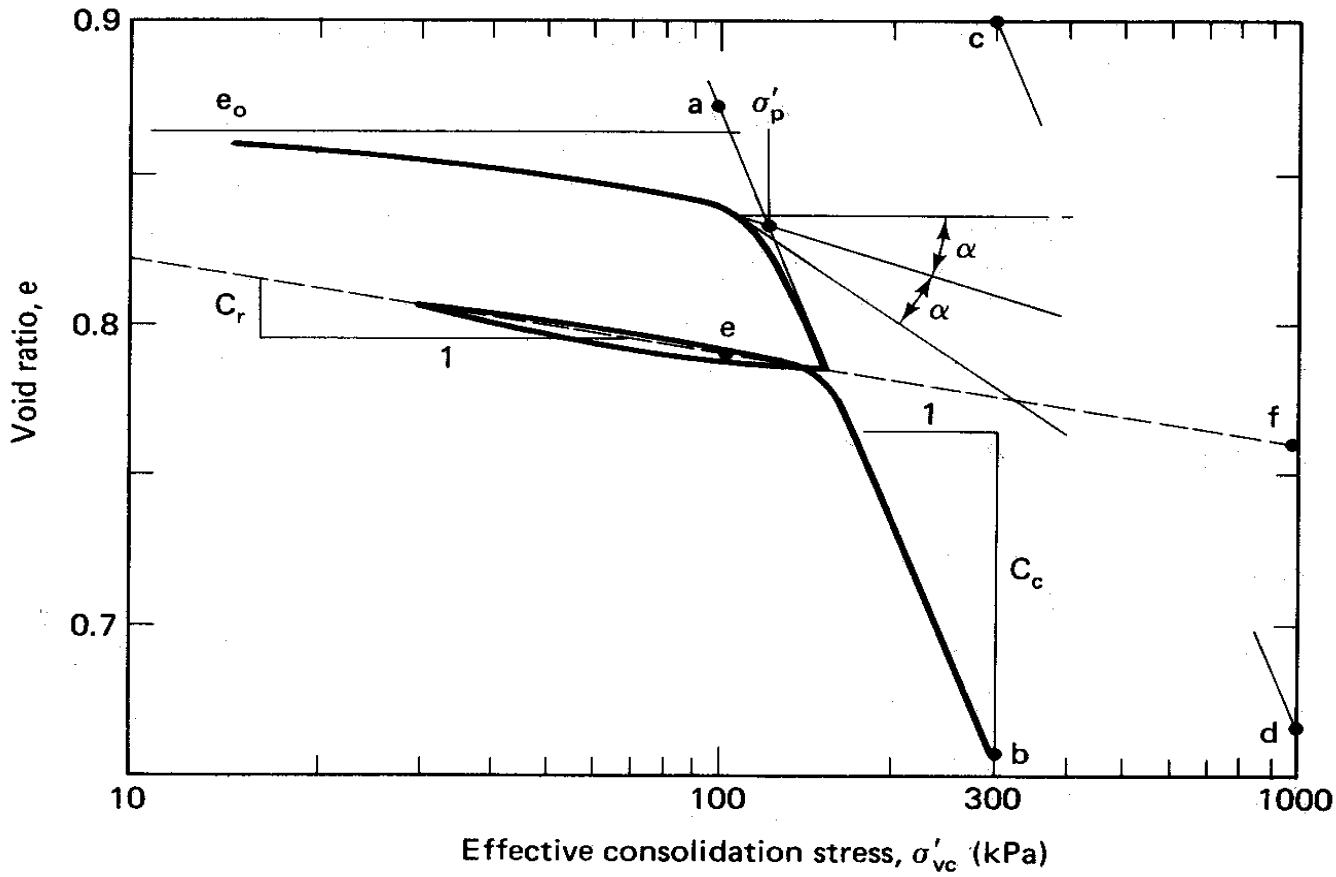

Figure 12-10: Typical Plot of Void Ratio Versus Log Effective Vertical Stress from a Consolidation Test on Clay

TABLE 12-2
CORRELATIONS FOR C_c

Correlation	Soil	Source
C_c=0.009 (LL-10)	Clay of medium to low sensitivity (S_t<4)[1]	Terzaghi & Peck (1967)
C_c=0.0115 w_n	Organic soils, peat	ASCE (1994)
C_c=0.20	Uniform silts	ASCE (1994)
C_c=0.05 to 0.06	Uniform sand, loose	ASCE (1994)
C_c=0.02 to 0.03	Uniform sand, dense	ASCE (1994)

Correction of Laboratory One-Dimensional Consolidation Curves

The process of sampling soils will cause some sampling disturbance, no matter how carefully the samples are taken. This sampling disturbance will affect virtually all measured physical properties (compressibility, strength, permeability, etc.) of the soil to some degree. The sampling disturbance will usually cause the measured laboratory void ratio-effective stress "break" to occur at a lower apparent maximum past vertical pressure (σ'_p) (preconsolidation), than would be measured for an undisturbed specimen. The effect of disturbance from the sampling procedure is illustrated in Figure 12-11.

Figure 12-11 shows three consolidation curves for an insensitive clay from Fond du Lac, Wisconsin. The curve for the remolded sample is the flattest curve without a well defined break between reloading and virgin compression (i.e., "fully disturbed"). The curve for a 2 inch tube sample shows the more typical break in the curve. The curve for the 3 inch tube sample trimmed to a 2 inch sample shows a well defined break that is very similar to the estimated field compression curve which is the most accurate.

It is still necessary to "correct" the e-log σ'_v curve of good quality samples since no sampling technique is perfect. There are several techniques available to correct the consolidation curve. For a detailed discussion on field corrections see FHWA NHI 01-031.

Consolidation test results are used to estimate the magnitude and rate of settlement for pile foundations in cohesive soils.

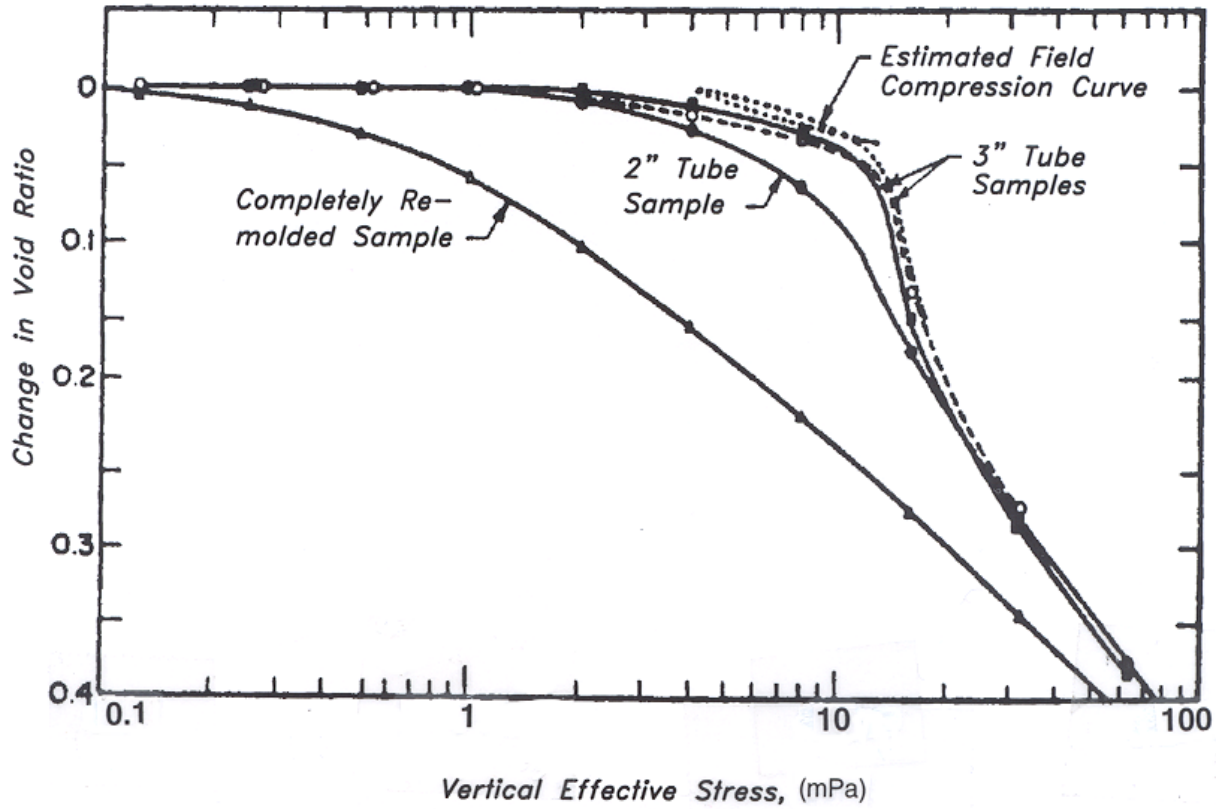

Figure 12-11: Effect of Disturbance on One-Dimensional Consolidation Void Ratio-Effective Stress Curve (Olson, 1995)

12.10 LABORATORY TESTING FOR PILE DRIVEABILITY DETERMINATION

In order to assess the pile driveability and potential soil setup effects for timber pile foundations the following soil properties should be evaluated: the remolded shear strength of cohesive soils, or the gradation and fine content of cohesionless soils.

Cohesive soils may lose a significant portion of their shear strength when disturbed or remolded, as during the pile driving process. The sensitivity of a cohesive soil (S_t) is the ratio of the undrained shear strength of an undisturbed specimen to the undrained shear strength of a remolded specimen. To determine site specific soil sensitivity from laboratory data, remolded soil specimens having the same moisture content as undisturbed specimens should be tested. The best assessment of the remolded shear strength of cohesive soils may be made from field vane shear tests.

The gradation and fine content of cohesionless soils are useful in determining pile driveability. Soils with a high fine content generally have a lower friction angle than soils of similar density with lower fine content. A high fine content may also affect soil permeability, drainage, and pore pressure during shear which may result in lower effective stress. Depending on soil density,

cohesionless soils with high fine content are also more likely to demonstrate soil setup. Routine laboratory grain size analyses can quantify gradation and fine content.

REFERENCES

American Forest and Paper Association (AF&PA), National Design Specification (NDS) for Wood Construction and Supplement, Design Values for Wood Construction, Timber Poles and Piles. Washington D. C.

ASCE 20-96 (1996) “Standard Guidelins for Design and Installation of Pile Foundations, “ American Society of Civil Engineers, Reston, VA

ASCE (1994), “Settlement Analysis,” Technical Engineering and Design Guides as Adapted from the US Corps of Engineers, No. 9.

ASTM D 25 “Standard Specification for Round Timber Piles,“ American Society for Testing and Materials, West Conshohocken, PA.

ASTM D 422 “Standard Test Method for Particle Size Analysis of Soils,“ American Society for Testing and Materials, West Conshohocken, PA.

ASTM D 1143 “Standard Test Method for Piles under Axial Compression Load,“ American Society for Testing and Materials, West Conshohocken, PA.

ASTM D 2216 “Standard Test Method Test Method for Laboratory Determination of Water (Moisture) Content of Soil and Rock by Mass,“ American Society for Testing and Materials, West Conshohocken, PA.

ASTM D 2555 “Standard Test Method for Establishing Clear Wood Strength Values,“ American Society for Testing and Materials, West Conshohocken, PA.

ASTM D 2899 “Standard Practice for Establishing Design Stresses for Round Timber Piles,“ American Society for Testing and Materials, West Conshohocken, PA.

ASTM D 3441 “Standard Test Method for Mechanical Cone Penetration Tests in Soil,” American Society for Testing and Materials, West Conshohocken, PA.

ASTM D 4318 “Test Method for Liquid Limit, Plastic Limit, and Plasticity Index for Soils,“ American Society for Testing and Materials, West Conshohocken, PA.

ASTM D 4254 “Test Method for minimum Index Density and Unit Weight of Soils and Calculation of relative Density,“, American Society for Testing and Materials, West Conshohocken, PA.

AWPA C 3 “Pile – Preservative Treatment by Pressure Processes,” American Wood-Preservers’ Association, Granbury, TX.

AWPA C 14 “Wood for Highway Construction – Preservative Treatment by Pressure Processes,” American Wood-Preservers’ Association, Granbury, TX.

AWPA C 18 “Standard for Pressure Treated Material in Marine Construction,” American Wood-Preservers’ Association, Granbury, TX.

AWPA M 3 “Standard Quality Control Procedures for Wood Preserving Plants,” American Wood-Preservers’ Association, Granbury, TX.

American Wood Preserves Institute “Construction Guidelines for Timber Piling Projects,” AWPI, Fairfax, VA.

Arman, A., Samtani, N., Castelli, R., and Munfakh, G. (1997), “Geotechnical and Foundation Engineering, Module 1 – Subsurface Investigations,” Principal Investigator: George Munfakh, U.S. Department of Transportation, Federal Highway Administration, National Highway Institute Course 13231 – Publication No. FHWA-HI-97-021.

Arman, A., Collin, J.G., Hung, J.C.J., and Brouillette, R., (2001), “Geotechnical and Foundation Engineering, Module 7 – Shallow Foundations,” Principal Investigator: George Munfakh, U.S. Department of Transportation, Federal Highway Administration, National Highway Institute Course 13231 – Publication No. FHWA-NHI-01-023.

Bowles, J.E., (1977) *Foundation Analysis and Design, Second Edition,* McGraw-Hill Book Company.

Broms, B.B., (1964a) “Lateral Resistance of Piles in Cohesive Soils,” American Society of Civil Engineers, Journal for Soil Mechanics and Foundation Engineering, Vol. 90, SM2, page 27-63.

Broms, B.B., (1964b) “Lateral Resistance of Piles in Cohesionless Soils,” American Society of Civil Engineers, Journal for Soil Mechanics and Foundation Engineering, Vol. 90, SM3, page 21-32.

Broms, B.B., (1966) “Methods of Calculating the Ultimate Bearing Capacity of Piles- A Summary”, Sols-Sols No. 18-19, 21-32.

Canadian Standards Association (CSA), Can3-056-M Round Wood Piles CAN/CSA-080 Series M Wood Preservation. CAN/CSA 0.80.3 Preservative Treatment of Piles by Pressure Process.

Davisson, M.T. (1972) “High Capacity Piles,” Proceedings Soil Mechanics Lecture Series on Innovations in Foundation Construction, American Society of Civil Engineers, ASCE, Illinois Section, Chicago.

Fellenius, B.H., (1990) “Guidelines for the Interpretation of Static Load Test,” Deep Foundation Institute Short Course text, First Edition.

Fellenius, B.H., (1991) Chapter 13 – Pile Foundations, *Foundation Engineering Handbook, Second Edition,* H.S. Fang, Editor, van Nostrand Reinhold Publisher, New York.

Graham, J.S. (1992) “Treated Round Wood Piling Specifications,” 17th Annual Deep Foundation Institute Conference, New Orleans, Louisiana.

Hannigan, P.J., Goble, G.G., Thendean, G., Likins, G.E. and Rausche, F. (1997), "Design and Construction of Driven Pile Foundations," U.S. Department of Transportation, Federal Highway Administration – Publication No. FHWA-HI-97-013.

Jamiolkowski, M., Ladd, C.C., Germaine, J.T., and Lancellotta, R. (1985) "New Developments in Field and Laboratory Testing of Soils," Proceedings 11th International Conference on Soil Mechanics and Foundation Engineering, Vol 1, San Franscisco, CA.

Kyfor, Z.G., Schnore, A.R., Carlo, T.A., and Baily, P.F. (1992) "Static Testing of Deep Foundations," U.S. Department of Transportation, Federal Highway Administration – Publication No. FHWA-SA-91-042.

Meyerhof, G.G. (1976) "Bearing Capacity and Settlement of Pile Foundations," American Society of Civil Engineers (ASCE) Journal of Geotechnical Engineering Division.

Nordlund, R.L. (1979) "Poiny Bearing Capacity of Piles in Cohesionless Soils," Missouri-Rolla 5th Annual Short Course on Fundamentals of Deep Foundation Design.

Nottingham, L.C. (1975) "Use of Quasi-Static Friction Cone Penetrometer to Predict Load Capacity of Displacement Piles," Ph.D. Dissertation to the Department of Civil Engineering, University of Florida,

Olson, R.E., (1995) "CE 360 – Foundation Design," Civil Engineering Course Notes from the University of Texas at Austin.

Peck, R.B., Hanson, W.E., and Thornburn, T.H. (1974) Foundation Engineering, Second Edition, John Wiley & Sons, Inc., New York.

Poulos, H.G., and Davis, E.H. (1980) *Pile Foundation Analysis and Design,* John Wiley & Sons, New York, NY.

Rausche, F., Likins, G.E., Goble, G.G., and Hussein, M. (1986) "The performance of Pile Driving Systems Inspection Manual," U.S. Department of Transportation, Federal Highway Administration – Publication No. FHWA-RD-86/160.

Reese, L.C., (1984) *Handbook on Design of Piles and Drilled Shafts Under lateral Load*, U.S. Department of Transportation, Federal Highway Administration, Publication No. FHWA-IP-84-11.

Robertson, P.K., and Campanella, R.G., (1983) "Interpretation of Cone Penetration Tests. Part 1:Sands," Canadian Geotechnical Journal, Vol. 20, No. 4, Nov 1983.

Robertson, P.K., and Campanella, R.G., (1983) "Interpretation of Cone Penetration Tests. Part 2:Clays," Canadian Geotechnical Journal, Vol. 20, No. 4, Nov 1983.

Schmertmann, J.H. (1978) "Guidelines for Cone Penetration Test, Performance, and Design", U.S. Department of Transportation, Federal Highway Administration – Publication No. FHWA-TS-78-209.

Terzaghi, K., and Peck, R.B. (1967) *Soil Engineering Practice,* John Wiley & Sons, Inc., New York.

Tomlinson, M.J., (1980) *Foundation Design and Construction, Fourth Edition,* Pitman Advanced Publishing Program.

APPENDIX A
EXAMPLE PROBLEMS

PROBLEM 1

For the soil conditions shown below design a 75 kip Southern Pine timber pile. Use the Meyerhof method to estimate pile length. Use the Nordlund method for final design. A static pile load test will be conducted prior to driving production piles.

DEPTH	CORRECTED SPT N'	
5	3	LOOSE SAND γ_{sat} = 110 LBS/FT^3
10	5	
15	3	
20	12	MEDIUM DENSE TO DENSE COARSE SAND γ_{sat} = 115 LBS/FT^3
25	17	
30	15	
35	18	(SOIL LAYER FOR CALCULATIONS)
40	28	
45	29	
50	32	(ESTIMATED TOE OF PILE)
55	30	
60	31	
65	30	
70	32	END OF BORING

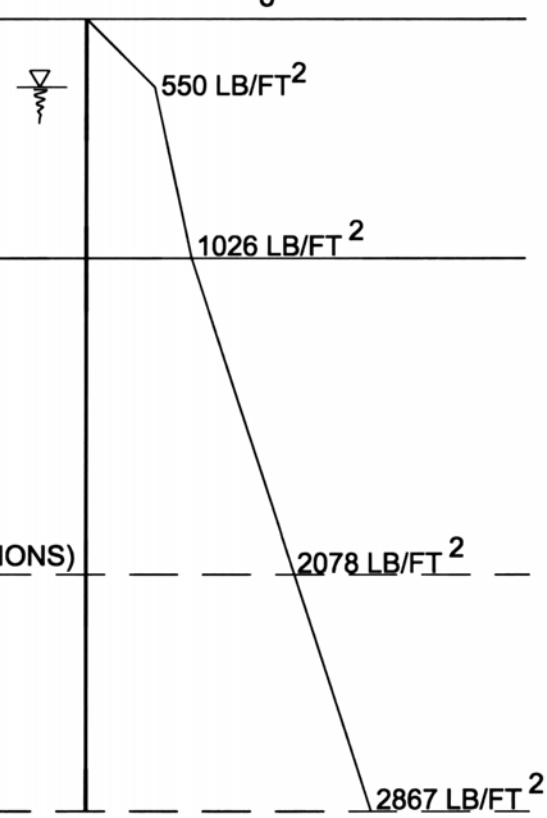

MEYERHOF METHOD

Step 1 Correct SPT field N values for overburden pressure using Figure 5-1.

Correction provided in definition of problem

Step 2 Compute the average corrected SPT N' value, $(\overline{N}')$ for each layer.
Note: For this example an estimated pile length of 50 feet will be used.

Layer 1 – Loose Sand – Depth = 0 to 15 feet

$$\overline{N}' = \frac{3+5+3}{3} = 4$$

Layer 2 – Medium Dense Coarse Sand – Depth = 15 to 35 feet

$$\overline{N}' = \frac{12+17+15+18}{4} = 16$$

Layer 3 – Dense Coarse Sand – Depth = 35 to 50 feet

$$\overline{N}' = \frac{28+29+32}{3} = 30$$

Step 3 Compute the unit shaft resistance for timber piles.

$$f_s = \frac{2\overline{N}'}{50} \leq 2\text{ksf} \qquad \text{Eq. 5-1}$$

Layer 1 $\quad f_s = \frac{2(4)}{50} = 0.16\,\text{ksf}$

Layer 2 $\quad f_s = \frac{2(16)}{50} = 0.64\,\text{ksf}$

Layer 3 $\quad f_s = \frac{2(30)}{50} = 1.20\,\text{ksf}$

Step 4 Compute ultimate shaft resistance, R_s ,(ksf).

As stated above try 50 foot piles. From Table 3-3 for an 75 kip pile the required tip diameter is 9 inches. From Table 3-5 for a 9 inch tip diameter and 50 foot pile the minimum butt is 11.8 inches.

$$R_s = \Sigma f_s A_s$$

$$R_s = \left[(0.16\text{ksf})(15\text{ft})\left(\frac{\pi}{12''/\text{ft}}\right)\left(\frac{11.8''+10.9''}{2}\right) + (0.64\text{ksf})(20\text{ft})\left(\frac{\pi}{12''/\text{ft}}\right)\left(\frac{10.9''+9.8''}{2}\right) + (1.20)(15\text{ft})\left(\frac{\pi}{12''/\text{ft}}\right)\left(\frac{9.8''+9''}{2}\right)\right]$$

$$R_s = 7\text{ kips} + 35\text{ kips} + 44\text{ kips} = 86\text{ kips}$$

Step 5 Compute the average corrected SPT for bearing stratum $(\overline{N}'_B)$ near the pile tip. The limiting value of unit toe resistance is reached when the embedment depth into the bearing stratum reaches 10 diameters and the average value includes the zone within 3 diameters below the tip. Therefore, the values of *N'* averaged should be in an approximate zone of 10*9"=90" above the tip and 3*9"= 28" below the tip. For this case use *N'* values from depth 45' to 55'.

$$\overline{N}'_B = \frac{29+32+30}{3} \approx 30$$

Step 6 Compute the unit toe resistance.

This example assumes a uniform, cohesionless stratum near the toe
.

$$q_t = \frac{0.8\overline{N}'_B D_B}{b} \qquad \text{Eq. 5-3}$$

$$q_t = \frac{0.8(30)(10\text{ft})}{(0.75\text{ft})} = 320 \text{ ksf}$$

Step 7 Compute the ultimate toe resistance, R_t

$$R_t = q_t\ A_t = 320ksf(\pi)r^2 = 320ksf(\pi)\left(\frac{9''}{2} * \frac{1ft}{12''}\right)^2 = 141\ kips$$

Step 8 Compute the Ultimate Pile Capacity

$$Q_u = R_s + R_t$$

$$Q_u = 86 \text{ kips} + 141 \text{ kips} = 227 \text{ kips}$$

Step 9 Compute the allowable design load Q_a. Since a pile load test will be performed a factor of Safety of 2.0 will be used.

$$Q_a = Q_u / Factor\ of\ Safety$$

$$Q_a = Q_u/2 = 227 \text{ kips}/2 = 114 \text{ kips } \phi \text{ 75 kips required}$$

Estimated length is O.K. therefore use 50 foot length for final design.

NORDLUND METHOD

Step 1

A. Construct an effective overburden pressure diagram (P_o) vs. depth. This is shown with the soil profile in the problem statement.
B. Correct the SPT field N values for overburden pressure using Fig. 5-1. Correction provided in definition of problem.
C. Determine ϕ for each layer of soil from laboratory tests or in-situ data. This example assumes no laboratory or in-situ data is available.

D. In the absence of laboratory or in-situ test data use Table 5-1.

From Table 5-1:

Layer 1: $\overline{N}' = 4$ $\phi \approx 27^o$

Layer 2: $\overline{N}' = 16$ $\phi \approx 32^o$

Layer 3: $\overline{N}' = 30$ $\phi \approx 35^o$

Step 2 Determine the friction angle between the pile and soil (δ) based on the displaced soil volume (V) and the soil friction angle (ϕ).

A. Compute the volume of soil displaced per unit length of pile (V).
To determine V use average pile diameter:
Butt = 11.8 inches, tip = 9 inches, average = 10.4 inches
Thus, for each foot of length,

$$V = \pi r^2 l = \pi\left(\frac{10.4"}{2}\frac{1ft}{12"}\right)^2 (1.0ft) = 0.59\,ft^3/lf$$

B. From Figure 5-3 determine the ratio of the pile soil friction angle to the soil friction angle, δ/ϕ.

For V=0.59 ft^3/ft δ/ϕ = 0.55

$\therefore \quad \delta = 0.55\phi$

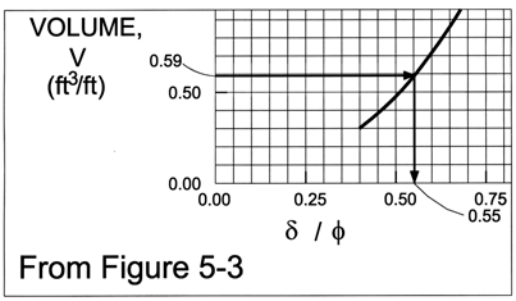

From Figure 5-3

Layer 1 δ_1 = 14.9°

Layer 2 δ_2 = 17.6°

Layer 3 δ_3 = 19.3°

Step 3 Determine the coefficient of lateral earth pressure, K_δ, for each ϕ angle.

Calculate pile taper angle, ω:

$$\tan\omega = \frac{\left(\frac{11.8"-9"}{2}\right)\left(\frac{1ft}{12"}\right)}{50ft} = 0.0023$$

$$\omega = 0.13°$$

Not all of the ϕ angles chosen in Step 1 match those used to develop the charts in Figures 5-4, 5-5, and 5-6, and the displaced volume of 0.59 ft^3/ft does not correspond to the curves shown. Estimate K_δ from visual examination of the charts based on ϕ angles closest to the estimated ϕ angles from Step 1. Figure 5-4 for Layer 1 is shown below, Figures 5-5 and 5-6 are used in a similar manner for Layers 2 and 3.

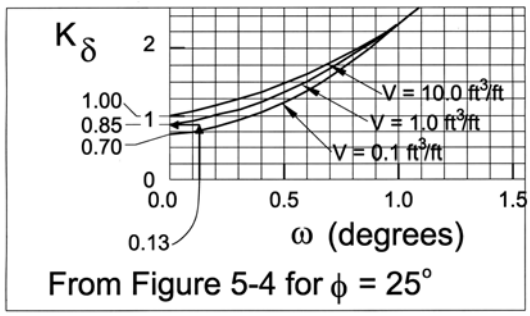

Layer 1 $K_\delta \approx 0.85$
Use Figure 5-4 for $\phi = 25^o$

Layer 2 $K_\delta \approx 1.25$
Use Figure 5-5 for $\phi = 30^o$

Layer 3 $K_\delta \approx 1.85$
Use Figure 5-6 for $\phi = 35^o$

Step 4 Determine the correction factor, C_F, to be applied to K_δ if $\delta \neq \phi$ using Figure 5-8.

Layer 1	$\phi=27^o$	$\delta/\phi=0.55$	$C_F=0.82$
Layer 2	$\phi=32^o$	$\delta/\phi=0.55$	$C_F=0.77$
Layer 3	$\phi=35^o$	$\delta/\phi=0.55$	$C_F=0.72$

Step 5 Compute the average effective overburden pressure at the mid-point of each layer, p_d.

Layer 1 midpoint depth $= (15'-0')/2 = 7.5'$

$$p_{d1} = 5'(110pcf) + 2.5'(110pcf - 62.4pcf) = 669psf$$

Layer 2 midpoint depth $= 15' + [(35'-15')/2] = 25.0'$

$$p_{d2} = 669\ psf + 7.5'(110pcf - 62.4pcf) + 10'(115pcf - 62.4pcf)$$

$$p_{d2} = 669\ psf + 357\ psf + 526\ psf = 1552\ psf$$

Layer 3 midpoint depth $= 35' + [(50'-35')/2] = 42.5'$

$$p_{d3} = 1552\ psf + 17.5'(115pcf - 62.4pcf)$$

$$p_{d3} = 1552\ psf + 920\ psf = 2472\ psf$$

Step 6 Compute the shaft resistance in each layer of soil. The sum of the shaft resistance from each layer obtained is the ultimate shaft resistance.

$$R_s = \sum_{d=0}^{d=D} K_\delta C_F p_d \sin(\delta + \omega) C_d \Delta d / \cos\omega$$

where C_d = Pile perimeter, ft

Δd = Embedded length in layer, ft

All other terms previously defined in Steps 2 through 5

Layer 1:

$C_d = (\text{Ave. pile diameter for } 0'–15')(\pi) = (11.35")(1\text{ft}/12")(\pi) = 2.97'$

$\Delta d = 15'$

$R_{s1} = [(0.85)(0.82)(669\text{psf})\sin(14.9° + 0.13°)(2.97')(15')]/\cos(0.13°) = 5387\text{ lbs}$

Layer 2:

$C_d = (\text{Ave. pile diameter for } 15'–35')(\pi) = (10.35")(1\text{ft}/12")(\pi) = 2.71'$

$\Delta d = 20'$

$R_{s2} = [(1.25)(0.77)(1552\text{psf})\sin(17.6° + 0.13°)(2.71')(20')]/\cos(0.13°) = 24656\text{ lbs}$

Layer 3:

$C_d = (\text{Ave. pile diameter for } 35'–50')(\pi) = (9.4")(1\text{ft}/12')(\pi) = 2.46'$

$\Delta d = 15'$

$R_{s3} = [(1.85)(0.72)(2474\text{psf})\sin(19.3° + 0.13°)(2.46')(15')]/\cos(0.13°) = 40451\text{lbs}$

$$\sum R_s = R_{s1} + R_{s2} + R_{s3} = 5387 \text{ lbs} + 24656 \text{ lbs} + 40451 \text{ lbs} = 70494 \text{ lbs}$$

Step 7 Determine the α_t coefficient and the bearing capacity factor, N'_q, from the friction angle of the soil near the pile.

These values are found in Figure 5-9 (a) and 5-9(b) using a ϕ=35° at the pile toe. To find the α_t coefficient the ratio of D/b must be determined.

$$\frac{D}{b} = \frac{\text{Embedded pile length}}{\text{Pile diameter}} = \frac{50'}{0.75'} = 67.0$$

α_t = 0.67

N'_q = 65.0

Step 8 Compute the effective overburden pressure at the pile toe, p_t.

Add the overburden pressure for the distance from the midpoint of Layer 3 to the toe of the pile to that found in Step 5 above.

$$p_t = 2474\text{psf} + 7.5'(115\text{pcf} - 62.4\text{pcf}) = 2867\text{psf}$$

Confirm the p_t found is less than the limiting value of 3000 psf.

$$p_t = 2867\text{psf} \le 3000\text{psf} \qquad \text{O.K.}$$

Step 9 Compute the ultimate toe resistance, R_t.

$$R_t = \alpha_t N'_q A_t p_t$$

$$R_t = (0.67)(65)(\pi)\left(\frac{9}{2}\frac{1\text{ft}}{12''}\right)^2(2867\text{psf})$$

$$R_t = 55161\text{lbs}$$

Confirm the R_t calculated is less than the limiting value found for ϕ=35° from the chart in Figure 5-10.

Limiting unit toe resistance, q_L, = 105 kips/ft^2

$$R_t = q_L A_t = (105\text{ksf})(\pi)\left(\frac{9''}{2}\frac{1\text{ft}}{12''}\right)^2\left(\frac{1000\text{lbs}}{1\text{kip}}\right) = 46388\text{lbs}$$

Use the lessor of the two calculated values, $\therefore \quad R_t = 46388$ lbs

Step 10 Compute the ultimate pile capacity.

$$Q_u = R_s + R_t = 70494 \text{ lbs} + 46388\text{lbs} \approx 117{,}000 \text{ lbs}$$

Step 11 Compute the allowable design load Q_a. Since a pile load test will be performed a factor of Safety of 2.0 will be used.

$$Q_a = {Q_u}/{Factor\ of\ Safety}$$

$$Q_a = {Q_u}/{2} = {117\text{kips}}/{2} = 58\text{kips} \ \pi \ 75 \text{ kips required}$$

Since the pile has substantially less capacity than required, recalculate the allowable design load Q_a with an increased pile length of 60 feet. Referencing Table 3-5 for 9 inch tip and 60 foot pile use 12.4" butt diameter and 9" tip diameter. Calculate the revised pile taper angle, ω:

$$\tan\omega = \frac{\left(\frac{12.4''-9''}{2}\right)\left(\frac{1\text{ft}}{12''}\right)}{60\text{ft}} = 0.0023$$

$$\omega = 0.13°$$

Since the revised pile has the same tip diameter and pile taper as the original pile, the volume of soil displaced per length of pile, V, will not change. Therefore, Steps 1 through 4 of the original calculations do not change.

Step 5A Compute the average effective overburden pressure at the mid-point of each layer, p_d. Layers 1 and 2 calculations do not change for this step.

Layer 1 $p_{d1} = 669\text{psf}$ (No change from original)

Layer 2 $p_{d1} = 1552\text{psf}$ (No change from original)

Layer 3 $\text{midpoint depth} = 35' + [(60'-35')/2] = 47.5'$

$p_{d3} = 1552\text{ psf} + 22.5'(115\text{pcf} - 62.4\text{pcf})$

$p_{d3} = 1552\text{ psf} + 1184\text{ psf} = 2736\text{ psf}$

Step6A Compute the shaft resistance in each layer of soil. The sum of the shaft resistance from each layer obtained is the ultimate shaft resistance.

$$R_s = \sum_{d=0}^{d=D} K_\delta C_F p_d \sin(\delta + \omega) C_d \Delta d / \cos\omega$$

where C_d = Pile perimeter, ft

Δd = Embedded length in layer, ft

All other terms previously defined in Steps 2 through 5

Layer 1:

$C_d = (\text{Ave. pile diameter for } 0'–15')(\pi) = (11.98")(1\text{ft}/12")(\pi) = 3.14'$

$\Delta d = 15'$

$R_{s1} = [(0.85)(0.82)(669\text{psf})\sin(14.9° + 0.13°)(3.14')(15')]/\cos(0.13°) = 5695\text{ lbs}$

Layer 2:

$C_d = (\text{Ave. pile diameter for } 15'–35')(\pi) = (10.98")(1\text{ft}/12")(\pi) = 2.87'$

$\Delta d = 20'$

$R_{s2} = [(1.25)(0.77)(1552\text{psf})\sin(17.6° + 0.13°)(2.87')(20')]/\cos(0.13°) = 26112\text{ lbs}$

Layer 3:

$C_d = (\text{Ave. pile diameter for } 35'–60')(\pi) = (9.70")(1\text{ft}/12")(\pi) = 2.54'$

$\Delta d = 25'$

$R_{s3} = [(1.85)(0.72)(2736\text{psf})\sin(19.3° + 0.13°)(2.54')(25')]/\cos(0.13°) = 76982\text{ lbs}$

$$\sum R_s = R_{s1} + R_{s2} + R_{s3} = 5695\text{ lbs} + 26112\text{ lbs} + 76982\text{ lbs} = 108789\text{ lbs}$$

Step7A Determine the α_t coefficient and the bearing capacity factor, N'_q, from the friction angle of the soil near the pile.

These values are the same as originally found by Figures 5-9 (a) and 5-9(b):

α_t = 0.67

N'_q = 65.0

Step 8A Compute the effective overburden pressure at the revised pile toe, p_t.

Add the overburden pressure for the distance from the midpoint of Layer 3 to the toe of the pile to that found in Step 5A above.

$$p_t = 2736\text{psf} + 12.5'(115\text{pcf} - 62.4\text{pcf}) = 3393\text{psf}$$

The p_t found is greater than the limiting value of 3000 psf.
Use the limiting value of 3000psf in Step 9A.

Step 9A Compute the ultimate toe resistance, R_t.

$$R_t = \alpha_t N'_q A_t p_t$$

$$R_t = (0.67)(65)(\pi)\left(\frac{9}{2}\frac{1\text{ft}}{12''}\right)^2(3000\text{psf})$$

$$R_t = 57719 \text{ lbs}$$

Confirm the R_t calculated is less than the limiting value found for ϕ=35° from the chart in Figure 5-10.

Limiting unit toe resistance, q_L, = 105 kips/ft^2

$$R_t = q_L A_t = (105\text{ksf})(\pi)\left(\frac{9''}{2}\frac{1\text{ft}}{12''}\right)^2\left(\frac{1000\text{lbs}}{1\text{kip}}\right) = 46388\text{lbs}$$

Use the lessor of the two calculated values, $\therefore \quad R_t = 46388\text{lbs}$

Step 10A Compute the ultimate pile capacity.

$$Q_u = R_s + R_t = 108789 \text{ lbs} + 46388\text{lbs} \approx 155177 \text{ lbs} \quad \text{(approx. 155 kips)}$$

Compute the allowable design load Q_a. Since a pile load test will be performed a factor of Safety of 2.0 will be used.

$$Q_a = {Q_u}/{Factor\ of\ Safety}$$

$$Q_a = {Q_u}/{2} = {155\text{kips}}/{2} = 78\text{kips} \ \phi \ 75 \text{ kips required} \therefore \text{O.K.}$$

PROBLEM 2

Design a 60 kip Douglas Fir timber pile for the soil conditions shown below using the α method. A static pile load test will be conducted prior to driving production piles.

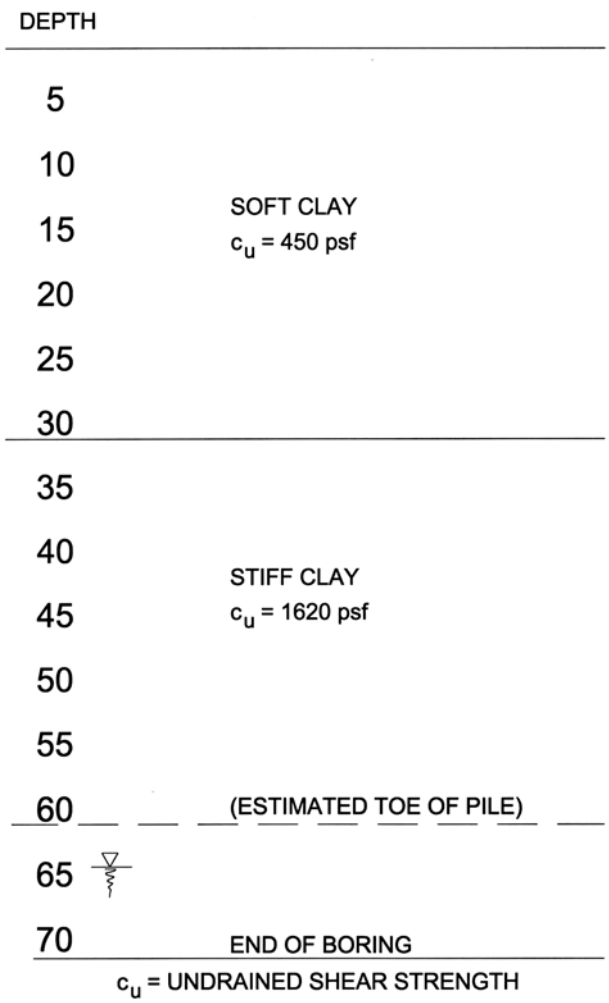

PILE SELECTION

Assume pile length of 60 feet. From Table 3-3 for a 60 kip pile the required minimum tip diameter is 8 inches. From Table 3-7 the minimum butt diameter for Douglas Fir with a specified tip diameter of 8 inches is 12.7 inches. Use 13" butt diameter for calculations.

α METHOD

Step 1 Delineate the soil profile into layers and determine the adhesion factor, α, from Figure 5-12.

Layer 1	Depth 0' to 30' D_1 = 30 ft	Soft clay	Use Figure 5-12c

$$b_1 = \frac{12.7" + 10.35}{2}\left(\frac{1ft}{12"}\right) = 0.96\ ft$$

D/b=30'/0.96'=31

c_u = 450 psf

α = 1.0

Layer 2 Depth 30' to 60' Stiff clay Use Figure 5-12b

D_2 = 30 ft

$$b_2 = \frac{10.35" + 8.00}{2}\left(\frac{1ft}{12"}\right) = 0.76\ ft$$

D/b=30'/0.76'=39

c_u = 1620 psf

α = 0.7

Step 2 Compute the unit shaft resistance for each layer

Layer 1

$$f_s = \alpha c_u = (1.0)(450psf) = 450psf$$

Layer 2

$$f_s = \alpha c_u = (0.7)(1620psf) = 1134psf$$

Step 3 Compute the shaft resistance in each soil layer and the ultimate shaft resistance, R_s, from the sum of the shaft resistances for each layer.

$$R_s = \Sigma f_s A_s = \Sigma[f_s(L\pi D_{ave})]$$

$$R_{s1} = (450psf)(30ft)(\pi)\left(\frac{13" + 10.5"}{2}\right)\left(\frac{1ft}{12"}\right) = 41{,}528lbs$$

$$R_{s2} = (1134psf)(30ft)(\pi)\left(\frac{10.5" + 8"}{2}\right)\left(\frac{1ft}{12"}\right) = 82{,}384lbs$$

$$R_s = R_{s1} + R_{s2} = 41528lbs + 82384lbs = 12{,}3912lbs$$

Step 4 Compute the unit toe resistance, q_t

$$q_t = 9c_u = 9(1620psf) = 14{,}580psf$$

Step 5 Compute the ultimate toe resistance, R_t

$$R_t = q_t A_t = (14580psf)(\pi)\left(\frac{0.67"}{2}\right)^2 = 5{,}140lbs$$

Step 6 Compute the ultimate pile capacity

$$Q_u = R_s + R_t$$

$$Q_u = 123{,}912\text{lbs} + 5{,}140\text{lbs} \approx 129{,}000\text{lbs} \quad (129\text{kips})$$

Step 7 Compute the allowable design load, Q_a. Use a factor of Safety of 2.0 based on performing a pile load test.

$$Q_a = \frac{Q_u}{2} = \frac{129\text{kips}}{2} = 64\text{kips} \; \phi \; 60\text{kips} \quad \text{O.K.}$$

PROBLEM 3

Use the effective stress method to calculate the ultimate capacity and allowable capacity of a 12” butt diameter and 7” tip diameter Southern Yellow Pine timber pile driven into the soil profile described below. No pile load test will be performed before driving production piles.

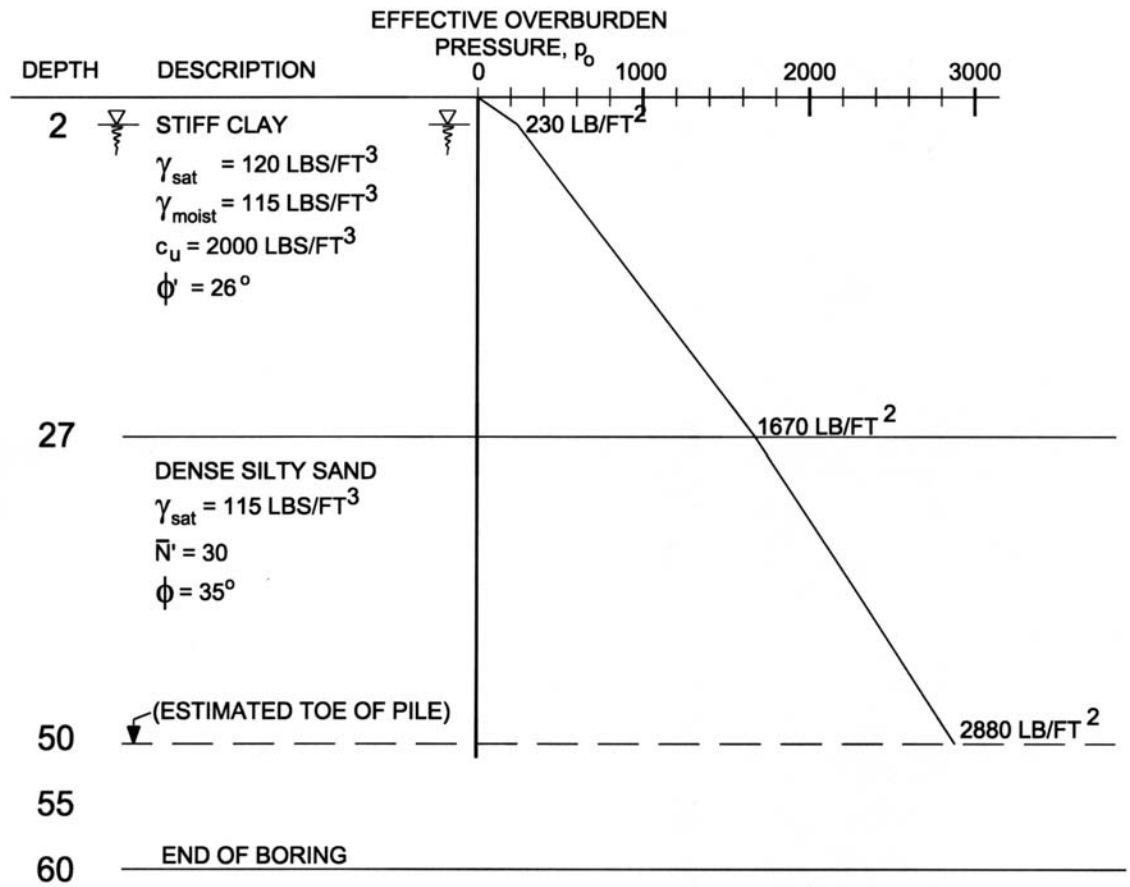

EFFECTIVE STRESS METHOD (FHWA-HI-97-013)

Step 1 Delineate the soil profile into layers and determine ϕ’ angle for each layer.

A. Construct the effective overburden versus depth diagram.

z = 2’ $p_o = (2')(115pcf) = 230psf$

z = 27’ $p_o = 230psf + (25')(120pcf - 62.4pcf) = 1670psf$

z = 50’ $p_o = 1670psf + (23')(115pcf - 62.4pcf) = 2880psf$

B. Divide the soil profile throughout the pile penetration depth into

layers and determine the effective overburden pressure at the midpoint of each layer.

Layer 1 midpoint at $z_1 = \frac{27'}{2} = 13.5'$

$$p_{o1} = (2')(115pcf) + (11.5)(120pcf - 62.4pcf) = 892psf$$

Layer 1 midpoint at $z_2 = 27'' + \frac{23'}{2} = 38.5'$

$$p_{o2} = (2')(115pcf) + (25')(120pcf - 62.4pcf) + (11.5')(115pcf - 62.4pcf) = 2275psf$$

C. Determine the ϕ' angle for each layer.

This information was provided in problem definition.

Step 2 Select the β coefficient for each soil layer using Table 5-2 and Figure 5-13.

	Layer 1	Layer 2
From Table 5-2	ave. $\beta \approx 0.32$	ave. $\beta \approx 0.45$
From Figure 5-13	$\beta \approx 0.28$	$\beta \approx 0.39$
Use for calculations	$\beta = 0.30$	$\beta = 0.40$

Step 3 For each soil layer compute the unit shaft resistance, f_s.

$$f_s = \beta \overline{p}_o$$

Layer 1 $f_{s1} = (0.3)(892psf) = 267psf$

Layer 2 $f_{s2} = (0.4)(2275psf) = 910psf$

Step 4 Compute the shaft resistance in each layer and the ultimate shaft resistance, R_s, from the sum of the shaft resistances each layer.

$$R_s = f_s A_s = f_s (L \pi D_{ave})$$

For a 50' timber pile with a 12" butt diameter and a 7" tip diameter the pile diameter decreases 5"over 50'=1"/10'.

Layer 1: $R_{s1} = (267psf)(27')\left(\frac{12''+9.3''}{2}\frac{1ft}{12''}\right)(\pi) = 20100 \text{ lbs}$

Layer 2: $R_{s2} = (910psf)(23')\left(\frac{9.3''+7''}{2}\frac{1ft}{12''}\right)(\pi) = 44658 \text{ lbs}$

Ultimate Shaft Resistance:

$$R_s = \Sigma f_s A_s = 20100\text{lbs} + 44658\text{lbs} = 64758\,\text{lbs}$$

Step 5 Compute the unit toe resistance.

$$q_t = N_t p_t$$

From Figure 5-14 for $\phi' = 35^o$, $N_t = 55$
p_t = the overburden pressure at the toe of the pile (50') = 2890 psf

$$q_t = (55)(2890\text{psf}) = 158950\,\text{psf}$$

Step 6 Compute the ultimate toe resistance, R_t.

$$R_t = q_t A_t = q_t(\pi r^2)$$

$$R_t = (158950\text{psf})(\pi)\left(\frac{7''}{2}\frac{1\text{ft}}{12''}\right)^2 = 42480\,\text{lbs}$$

Step 7 Compute the ultimate pile capacity, Q_u.

$$Q_u = R_s + R_t$$

$$Q_u = 64758\,\text{lbs} + 42480\text{ lbs} \approx 107000\,\text{lbs} \quad (107\,\text{kips})$$

Step 8 Compute the allowable design load, Q_a. Since no load test will be performed prior to driving production piles use a factor of Safety of 3.0.

$$Q_a = Q_u / \text{Factor of Safety}$$

$$Q_a = Q_u/3 = 107\,\text{kips}/3 \approx 35\,\text{kips}$$